SERIES 705

Polyvend® INC.

SERVICE MANUAL

Polyvend® INC.

WARRANTY LIMITED

Polyvend Inc. warrants this equipment to the ORIGINAL PURCHASER only, for a period of one (1) year from the date of shipment, to be free from significant defects in material and workmanship, three (3) years on electronic components and five (5) years on vending motors to the extent such parts are warranted to Polyvend Inc., except for filter cartridges, starters, light bulbs and fuses, which will be warranted for two months from date of shipment.

Should any part prove defective within the warranted period, Polyvend Inc. will repair or replace (at its option) the defective component, but will not provide the labor, removal or installation costs associated with such parts. All returned products or parts must be shipped freight prepaid to Polyvend and Polyvend will then prepay the shipping cost of the returned goods. Polyvend Inc. reserves the right to refuse any collect shipment. Any part returned under the terms of this warranty should be accompanied with a brief description of the defect or failure along with the model number and serial number.

This warranty applies only if the equipment is serviced and maintained in strict accordance with the instructions given in the Polyvend Service Manual and that no unauthorized repair or disassembly has been done. Any defect caused by improper source of power supplied, abuse of the product, accident, alteration, vandalism, mineral build-up or improper cleaning or service techniques will not be covered by warranty.

Polyvend service or repair to items not in warranty will be subject to the standard service charge for repair of the failed components. For warranty or service information call or write to Polyvend Service Department.

TABLE OF CONTENTS

WARRANTY 1
GENERAL INFORMATION 2
SPECIFICATIONS 2
STANDARD CONFIGURATION 2
INSTALLATION 3-4
PRODUCT LOADING 5
NARROW PRODUCT LOADING 6
GUM AND MINT TRAY LOADING 7
PRIMARY CABINET COMPONENTS 8
ELECTRONIC SPECIFICATIONS 9
THEORY OF OPERATION 10
ELECTRICAL SERVICE SECTION 11-19
DETAILED OPERATION OF CONTROL BOARD 12
CLEANING AND MAINTENANCE 20
SHIPPING POLICY 21-22
TROUBLE SHOOTING SECTION 23-26
DIAGRAMS AND PARTS LISTS 28-72
LOCKING BAR ASSEMBLY 29-30
COIN BOX ASSEMBLY 31-32
DELIVERY COMPARTMENT ASSEMBLY 33-34
DOOR GLASS ASSEMBLY 35-36
LIGHT ASSEMBLY 37-38
CHANGER MOUNTING ASSEMBLY 39-40
COIN RETURN BUTTON ASSEMBLY 41-42
COIN RETURN CUP/DOOR HINGE ASSEMBLY 43-44
CABINET ASSEMBLY 45-46
TRAY SUPPORT ASSEMBLY 47-48
TOP TRAY ASSEMBLY 49-50
WIDE COLUMN TRAY ASSEMBLY 51-52
NARROW COLUMN ASSEMBLY 53-54
MAIN CABINET PANELS/LEGS 55-56
CONTROL BOARD/KEYPAD ASSEMBLY 57-58
POWER BOX ASSEMBLY 59-60
DELIVERY COMPARTMENT ASSEMBLY 61-62
FRONT DOOR TRIM SCREWS 63
FRONT DOOR TRIM 705 TRON 64
FRONT DOOR TRIM 705 STERLING ROYCE 65
FRONT DOOR TRIM 705 SIGNATURE 66
FRONT DOOR TRIM 705 GENESIS 67
FRONT DOOR TRIM 705 PRESIDENTIAL WALNUT 68
FRONT DOOR TRIM 705 IMPERIAL CROWN 69
FRONT DOOR TRIM 705 SILVER TRON 70
FRONT DOOR TRIM 705 SLATE 71
WIRING DIAGRAM/WIRING ASSEMBLY PARTS LIST 72

POLYVEND INC.
GLASS FRONT SERVICE MANUAL
SERIES 705-6640 BANKABLE
INTERNATIONAL

GENERAL

The Polyvend Series 705-6640 Merchandiser has independent dispensing units, each with a helix activated by letter and number push buttons. The Series 705-6640 is a large capacity merchandiser with the capability of changing the front panels to allow the machine to go into a bank of vending equipment and match the existing equipment. The dispensing units are supplied with helices of various opening widths to accommodate a wide range of products.

SPECIFICATIONS

HEIGHT ..... 72"

WIDTH ..... 40"

DEPTH ..... 35"

SHIPPING WEIGHT ..... Approx. 630 lbs.

ELECTRICAL

PRIMARY VOLTAGE ..... 110 VAC
SECONDARY VOLTAGE ..... 24 VAC
MAX. CURRENT ..... 3 AMP
VOLTAGE TO CHANGER ..... 24 VAC
VOLTAGE TO BILL VALIDATOR ..... 24 VAC

STANDARD CONFIGURATION

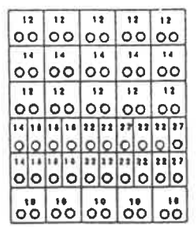

40 Selections
Shelf Capacity 650

HELIX SIZE	PRODUCT SIZE
2"	10
1 3/4"	12
1 1/2"	14
1 3/16"	18
1"	22
13/16"	27

* All items subject to change without notice.

INSTALLATION

- Remove all external packing material.
- Inspect equipment for shipping damage. If evident, file a claim immediately with the carrier (See shipping policy).
- Remove keys from product dispensing compartment (in small manila envelope), unlock the service door and remove the shipping material.
- Check the operation of the service door and locking mechanism. They should operate smoothly and latch at all three locking plates.
- If optional Gum & Mint installed, slide the shipping clip to the left located on the left side of the gum and mint assembly. Release the tray on the right side with the latching clip and slide the tray in and out to ensure that everything slides smoothly.
- Remove the plastic ties holding each tray in place.
- Place machine into position and adjust leveling legs so the machine is level and all the legs sit firmly on the floor.
- Install changer and validator (if required) in machine.
- Plug service cord into 110VAC source using the three prong grounded plug provided. If a grounded outlet is not available, use a proper external ground on all locations.

NOTE: In order to comply with electrical safety regulations and Underwriters Laboratories requirements, all electrical equipment must be properly polarized and grounded. The Polyvend machine is wired so that it is properly polarized in accordance with the electrical code. If the wall outlet is wired and grounded properly, then the vending machine will connect properly.

Shown in views A and B are two properly grounded and polarized wall outlets. One is a three wire grounded type wall outlet (See View A) and the other is a two wire wall outlet (See View B) with an adapter in place.

Should the polarity at the wall outlet appear any way other than that shown below, the outlet should be rewired by qualified personnel.

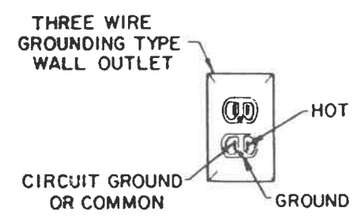

VIEW A

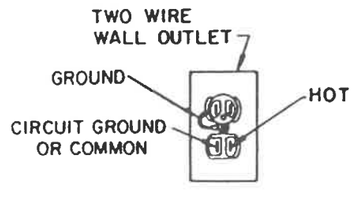

VIEW B

CAUTION: DISCONNECT POWER TO THE VENDING MACHINE BEFORE REMOVING THE CONTROL BOARD OR COIN CHANGER OR WORKING ON ANY COMPONENTS IN THE MACHINE.

- Check to ensure that the power present 24 VAC indicator light is illuminated on the right hand side of the control board located on the back side of the front door. Remember: When you open the front door, the safety interlock will shut off the power to the control board. To re-energize the control board, pull the plunger out on the safety interlock switch.

- Test the coin mechanism to insure smooth operation. If the operation is not smooth, check to make sure that you have proper alignment of the changer with the coin return lever.

- Load the coin tubes on the coin changer located in the pull out sliding drawer. It is very important to fill the 25¢, 10¢ and 5¢ tubes for proper changer payback. Note: The maximum amount of change a Coinco 9302LF changer will hold is $38.60; $22.50 in quarters, $12.70 in dimes and $3.40 in nickels. The maximum amount of change that a Mars TRC-6010XV will hold is $29.95; $16.75 in quarters, $9.80 in dimes and $3.40 in nickels.

- Place the price stickers on the trays to the right of the selection stickers. Set the prices of the products (See price setting p. 14).
  Note: To set the prices, the safety interlock switch must be energized by pulling the plunger out .

- Operate each dispenser, using coins. Operation should be smooth. Remember: The safety interlock must be energized in order to test out the changer. To energize, pull out the plunger on the safety interlock switch.

- Load the machine with product (See section on product loading).

- Check to make sure that the Vend Options, i.e. forced vend, max. change and bill escrow (if a feature of the bill validator installed) are at the desired setting (See Vend options).

PRODUCT LOADING

Helix Tray Dispenser

There are several helix pitches available. To insure proper operation and maximum capacity, the product size should closely match the opening between the windings of the helix so as not to be tight, but should fill most of the opening. If you can lift up on the product and the helix lifts up with it, the helix is too tight and will cause problems.

The helix sizes available are listed below.

CANDY HELIX	PRODUCT THICKNESS
27 count	3/4" - thin candy bar
22 count	1" - standard candy bar
18 count	1 3/16" - medium candy bar
14 count	1 1/2" - thick candy bar

SNACK HELIX (Dual Helix)	PRODUCT THICKNESS
14 count	1 1/2" - medium chip bag or pastry
12 count	1 3/4" - chip or pastry
10 count	2" - large bag chip or pastry
6 count	3" - large bag chip or lunch bucket type product

PRODUCT LOADING

To load a tray, lift up on the front of the tray and slide it out to the stop, then let it tilt down into the loading position. At this point, check that each helix is in its proper position. The figure below shows the proper position.

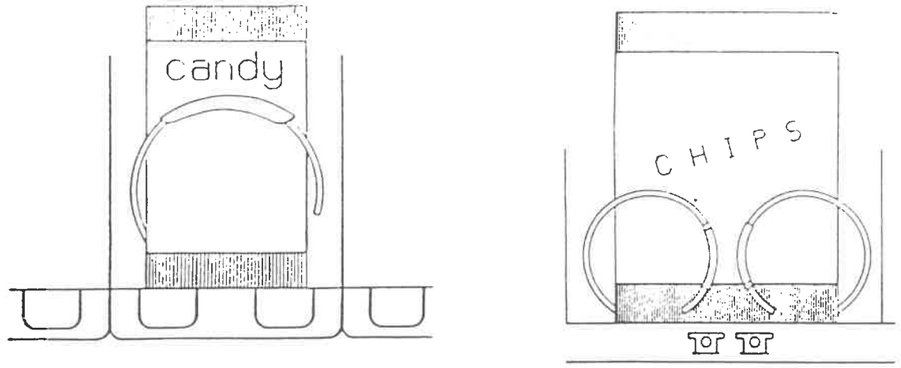

Starting at the front of the tray, insert a product between each winding of the helix so the name of the product is displayed forward. Be sure to place the product all the way to the bottom of the tray and tilt free end at the top backwards. Fill from front to back and be sure not to miss any positions. Note: The product must rest on tray NOT on helix. After filling the tray, lift the front of the tray and push it back in until it hits the stop.

NARROW PRODUCT LOADING

In order to keep narrow products positioned properly, the use of one of the spacer rails may be required. For addtional rails order part no. 099-5107.

To install the guide, press on the tray divider as shown in Figure 2 below.

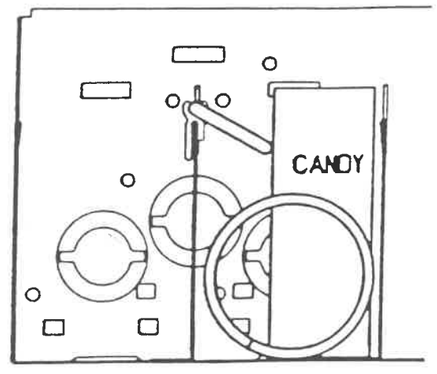

FIGURE 2

(OPTIONAL) GUM AND MINT TRAY LOADING SLIDE OUT DRAWER STYLE

The four select gum and mint dispenser is available in kit form or can be factory installed in a new machine. Each selection will hold up to 15 packs of gum (5 sticks per pack) or roll candy up to 4 inches in length. There is a small metal tab that can be installed to allow you to dispense small rolls of antacid tablets or similar size products.

All machines are prewired from the factory so you can install the gum and mint kit at a later date. The harness for the gum and mint assembly is plugged into the motor distribution board (same board the trays are plugged into).

LOADING INSTRUCTIONS

Release the tray by pushing on the tab located on the right side of the tray and pulling the tray out to the stop. To load, push the cover toward the rear of the machine. The two wide product selections are fitted with width adapters, installed for dispensing longer products up to 4" in length. Place the packs of gum or rolls of mints on their side and stack towards the back of the gum and mint tray. Upon filling each selection, slide the tray cover forward back into place. Then slide the tray back into the machine until latched into postion.

PRIMARY CABINET COMPONENT INFORMATION

HIGH VOLTAGE POWER SUPPLY

The high voltage power supply is located in the bottom of the machine on the left hand side. Inside of the power box are the step down transformer, ballast for the light, RFI filter and surge suppressor. The starter for the fluorescent light is located on top of the power supply box. There are two (2) circuit breakers located on the front of the power box.

STORAGE COMPARTMENT

The storage compartment is below the product display area and is accessed by opening the front door. Additional products may be stored in this area. Be sure to leave room for the delivery compartment when using the storage area.

TRAY ARRANGEMENT

The tray arrangement in the 705-6640 series can be changed. Either a candy or snack tray can be used in positions 2 through 6. The tray in position 1 (top tray in machine) cannot be switched with any other tray in machine or it will fall out. Be sure that after you plug the trays in that you power the machine up and go into the service mode. Then press selection button #3 and the digital display will show CONFIGURED when it has been completed. This will put the selections into the motor configuration.

TRAY REMOVAL

To remove the tray from the machine, start by disconnecting the tray harness (notice where harness is plugged in) and pull the harness back over the top of the tray. Now pull the tray forward until the rear stop is engaged. Lift up on the tray until it is at approximately 45 degree angle with the floor. While holding the tray front with one hand, place the other hand near the back of the tray on the bottom and lift up on the tray. Remove the tray from the machine an place the tray on a work surface. To install the tray reverse the process by holding the tray at a 45 degree angle with the floor and sliding tray back into machine. Then reinstall the tray harness. Go into the service mode and press selection button #3. Control board will show CONFIGURED when completed.

CAUTION: When removing the control board, extreme care should be taken to avoid introducing static electricity onto the control board. Under no circumstances should the board be placed on anything made of metal. To remove the control board, simply disconnect power to the control board, remove the control board cover, unplug the harnesses and remove the screws mounting the control board to the door.

ELECTRONIC SPECIFICATIONS

1. Prices can be set to a maximum of $99.95.

2. The control board will interface with the following 24 volt coin mechanisms.

   A. Coinco 9302LF 15 pin
   B. Mars TRC-6010XV 15 pin

3. The international control board will interface with the following validators and will accept $1 bills, $2 bills, $5 bills , $10 bills and $20 bills.

   A. Coinco BA32SA*
      * Option switches should be set as follows: Switches 3 & 8 should be "ON".

   B. Maka NB-1B 24 volt

   C. Mars VFM1-L2-U2C
      Mars VFM-3-L2-U2C*
      * Option switch should be set as follows: Switch 7 should be "ON".

CAUTION: When removing the control board, extreme care should be taken to avoid introducing static electricity into or onto the board. Under no circumstances should the board be placed on anything made of metal. To remove the control board, simply disconnect power to the control board, remove the control board cover, unplug the harness and remove the screws mounting the control board to the door.

THEORY OF OPERATION

When inserting coins and the highest price set in the machine is reached, no additional coins will be accepted by the changer. When inserting bills and the highest vend price set in the machine is reached, the validator will not accept any additional bills and the changer will not accept any coins.

By pressing a selection letter and number, the control board will compare the price of that selection with the credit accumulated and if there is enough, a vend motor will be energized. When the vend is completed, the control board will then determine if any change is due and dispense the correct change from the changer.

Should a vend motor fail to return to the home position in six (6) seconds, the control board will assume that the motor is jammed. The control board will then automatically take the selection out of service (remove it from the machine configuration) and inform the customer to "PLEASE MAKE AN ALTERNATE SELECTION". A jammed motor does not affect any other selection in the machine., The selection that is jammed will be displayed on the digital display as out of service when the mode button is pressed. The vend motor can be put back into service when the mode button is pressed and the selection has been service vended (free vended) two (2) times.

If the level of coins in the changer is too low, the control board will display the message "PLEASE INSERT EXACT MONEY" on the display and will also shut down the bill acceptance feature (if validator is installed).

When going into the Service Mode, the control board will display the following message if there is a problem.

A. The selection letter and number of a faulty or jammed motor along with an error code.
   Error 1 or Error 2.

B. Error code 3 - Loss of communication with changer. Changer has malfunctioned.

C. Error code 4 - EEPROM sum check error.

NOTE: Error 4 - Prices have been inadvertently altered and all prices have automatically been set to maximum by the control board. To clear these prices, reset pricing as desired.

If a bill validator is being utilized the machine can be programmed to Forced Vend or Non-Forced Vend the system. When the Forced Vend option is used, the customer must make a selection when the bill is accepted. The customer cannot use the machine as a changer maker.

ELECTRICAL SERVICE SECTION

MODES OF OPERATION

The system will operate in one of two modes, sales or service. On power up (after completing configuration), the machine is in the sales mode. Service mode may be selected by pressing the mode switch mounted on the control board. The system will return to the sales mode if the mode switch is pressed again or after 25 seconds of no service activity.

SALES MODE

In the sales mode, the control board will control the dispensing of products according to customer credit and selection inputs. The control board will communicate with the coin mechanism and dollar bill validator (if installed); so as credit is entered, it will be shown on the scrolling display. If there is inadequate change available, the coin mechanism will indicate that an exact change situation exists and the control board will show on the scrolling display "PLEASE INSERT EXACT MONEY".

When a customer makes a selection on the key pad, buttons A through G (within 5 seconds) numbers 0 through 9, the accumulated credit will be compared to the price set for this selection and if the credit is equal to or exceeds the set price, the corresponding motor will be energized. If the vend is successful, the price will be deducted from the credit value and the change returned.

The vend will be considered unsuccessful if the motor does not receive sufficient current or fails to reach the home position within six (6) seconds. The vend will not be attempted if the motor has already been detected as failed or if the selection made is not in the configuration of the machine. In any case, credit will not be deducted and the "PLEASE MAKE ALTERNATE SELECTION" message will be on the scrolling display until a new selection is made.

If there is insufficient credit for the selection made, the selection and the price of that selection will be displayed for five (5) seconds, followed by the message "PLEASE INSERT MORE MONEY". This message will be displayed until either enough credit is added and the selection made again or a lower price selection is made. The correct selection and the selection price will be displayed during the vend.

If power should fail during a vend, the credit will be lost and the selected motor will not be re-energized when power returns, thus the next vend of this motor may be shorter than normal.

SERVICE MODE

The service mode can be entered by pressing the "MODE BUTTON" located on the control board just above the 24 volt red power indicator light. By using the numbers and letters on the alphanumeric key pad, the operator can program and review the features of the control board. Upon pressing the "MODE BUTTON", the display will sequence through (1.5 seconds each) the alphanumeric selection codes of any motors which the control board believes to have failed and an error code will appear on the right, telling the operator the reason for the failure. Pressing and holding the #13 button will abort this sequence display.

DETAILED OPERATION OF CONTROL BOARD

At the time of delivery from Polyvend, Inc., the control board will be set as follows:

1. All vend options will be off.
2. The cash accountability will be set to $00,000.00. Note: Due to factory testing the total will not be exactly $00,000.00.
3. All of the prices will be set to $00.50.
4. The total number of vends non-reesettable will be 000000. NOTE: Due to factory testing the total will not be exactly 000000.
5. The time and date will be blank with the clock turned off.
6. The timed shut down intervals will be blank.
7. The promotional rows will be blank.

MODES OF OPERATION

The system will operate in one of two modes, sales or service. On power up (after completing configuration), the machine is in the sales mode. Service mode may be selected by pressing the mode switch mounted on the control board. The system will return to the sales mode if the mode switch is pressed again or after 25 seconds of no service mode activity.

ERROR CODES

1. Error 1 - Too little motor current
2. Error 2 - Too much time to complete the vend (6 seconds)
3. Error 3 - The control board has lost communications with the changer (changer has malfunctioned)
4. Error 4 - EEPROM sum check error

NOTE: Error 4 - Prices have been inadvertently altered and all prices have been automatically set to maximum by the control board. To clear these prices, reset pricing as desired.

1. COIN DISPENSING

To dispense nickels, dimes and quarters from the changer, press the service mode button. Now press button #1, then press the "A" button for nickels to be dispensed, "B" button for dimes to be dispensed and "C" button for quarters to be dispensed.

2. MOTOR COUNT

While in the service mode, press selection button #2 to display the total number of functioning motors. On the display, the message "MOTORS" and the total number found in the machine will appear.

3. MOTOR REMOVAL (CONFIGURATION)

To remove a motor from the configuration while in the service mode, press selection button #3. The control board will reconfigure to the currently functioning motors. The display will show "CONFIGURED" when completed.

ACCOUNTABILITY

1. CASH ACCOUNTABILITY

While in the service mode, press selection button #4. The control board will display "ACCOUNTING" and then press one of the following buttons:

A = Total cash accountability, the total value of all paid sales which will rollover after $99,999.95.

B = Total bill validator accountability (if bill validator installed), the total number of bills which will rollover after $99,999.

NOTE: This feature cannot be reset.

To exit this mode, press selection button #13.

2. TOTAL NUMBER OF PRODUCTS VENDED

While in the service mode, press selection button #4. The display will show "ACCOUNTING". Press selection button "C" to display the total number of products vended from this machine, which will rollover after 79,999,920 This function is non-resettable.

3. TOTAL NUMBER OF PRODUCTS VENDED (RESETTABLE FUNCTION)

While in the service mode, press selection button #4. The display will show "ACCOUNTING". Press selection button "D" to display the total number of products vended since the last reset.

4. RESET ALL RESETTABLE FUNCTIONS AT ONCE

While in the service mode, press selection button #4. The display will show "ACCOUNTING". Press selection button "E". The display will show "RESET". To reset all resettable functions only, press selection button "F". All functions will reset to "0". When using a DEX/UCS SYSTEM, once information has been downloaded to the hand held unit it will be required that the operator reset the functions using this procedure.

5. DOWNLOAD DEX/UCS

While in the service mode, press selection button #4. The display will show "DEX/UCS" and the control board will download the information to the hand held unit. Upon completion of the download of the resettable items, it will be necessary for the operator to then reset all of the resettable functions. The download of the control board does not automatically reset theses items to "0". They must be manually reset using function resetting in item 4.

6. PRICE SETTING

A. PRICE SETTING OF THE ENTIRE MACHINE

To set the price for the entire machine while in the service mode, press selection button #5. The control board will display "SELECTION", then you may press any selection letter and number. The control board will display the selection letter, number and price. Using the numbers on the key pad, press the most significant digit first then the less significant digits. Example: $00.90. Press button #9, then press button #0. To save this price for the entire machine press selection button #12. To cancel an unwanted price before the fourth number is entered, press selection button #13.

B. PRICE SETTING BY ROW

To set the price of an entire row of selections while in the service mode, press selection button #5. The control board will display "SELECTION". Then enter a selection letter and number from the row you want to set the prices on. The display will show the letter, number and current price. Using the numbers of the key pad, press the most significant number of the price first, followed by the less significant numbers. Example: $00.90. Press selection button #9 then press selection button #0. The digital display should read $00.90. In order to save this and set the entire row to this price, press selection button #11. To set the next row, press the #5 selection button, then enter the letter and number from the next row you want to set the prices on and repeat the price setting procedure. To cancel an unwanted price before the fourth number is entered, press selection button #13.

C. INDIVIDUAL PRICE SETTING

To set a single price on one item, while in the service mode, press selection button #5. The control board will display "SELECTION". Press the letter and number of the selection you wish to change. The selection letter and number will be displayed along with the current price. Using the numbers on the key pad, press the most significant digit first, then the less significant digits. Example: $00.85. Press selection button #8, then the selection button #5. The digital display should read $00.85. To save this price, press selection button #10. To set another single price, press selection button #5 and repeat the above sequence. To cancel an unwanted price before the fourth digit is entered, press button #13.

NOTE: When the price is set to $00.00, this is allowed and is a service vend (free vend). The machine can then be used as a display or show machine.

7. SERVICE VEND

A. SERVICE VEND BY INDIVIDUAL SELECTION

To service vend a vend motor, while in the service mode, press selection button #6. The control board will display "SELECTION". Enter the desired selection letter, followed by the number. This will be displayed with the selection price, while a vend of the motor is attempted. If the vend is successful, the display will blank. If the vend is not successful, the control board will beep three times before blanking.

B. SERVICE VEND BY ROW

To service vend an entire row of selection motors, while in the service mode, press selection button #7. The control board will display "SELECTION". Enter the letter of the desired row. The control board will display the selection number and the price while the vend is attempted starting with the highest number selection in that row. If the vend is successful, the control board will continue with the next selection. If the vend is not successful, the control board will beep three times and continue with the next motor. This cycle will repeat until vends on all motors in the row have been attempted, then the display will blank.

C. SERVICE VEND OF ENTIRE MACHINE

To service vend the entire machine of selections one time, while in the service mode, press selection button #8. The control board will display the selection number and price as the corresponding vend is attempted. If the vend is successful, the control board will continue on with the next motor. If the vend is not successful, the control board will beep three times and continue with the next motor. This cycle will be repeated until vends on all selections in the machine have been attempted, then the display will blank.

To stop the vending of the selections, press selection button #13 and hold until the current vend is completed.

8. POINT OF SALES MESSAGE PROGRAMMING

The machine comes preset from the factory with the message "ENJOY ONE OF OUR FINE SNACK PRODUCTS".

If you wish to change the Point of Sales message, press the service mode button on the control board, then press selection button #9. The control board will display "MESSAGE". Using the keypad overlay (provided in the large manila envelope) and following the keypad definitions, enter the new message. Menu 1 (blue characters) is the default menu. After each key entry, from either menu, the keypad will automatically return to Menu 1. To use Menu 2 (red characters), the "SHIFT(NEXT MENU)" key must be pressed prior to pressing a Menu 2 key. If you enter the wrong letter press BACK SPACE to remove that letter from message. Put two (2) spaces to indicate the end of the message and to prevent the message from running together. To save the message press "SHIFT" then press "ENTER" from within Menu 2.

Note: The maximum number of characters you can enter to form a message is 53 plus two spaces at the end of the message. A space between two words is one character.

MENU 1			MENU 2		
A	G	M	S	Y	4
B	H	N	T	Z	5
C	I	O	U	0	6
D	J	P	V	1	7
E	K	Q	W	2	8
F	L	R	X	3	9
SPACE	SHIFT	BACK	*	ENTER	$
			(NEXT MENU) SPACE		

EXAMPLE: "ENJOY OUR SNACKS". Press selection button #9. "MESSAGE" appears on the display. Using the overlay , press the letter E, letter N, letter J, letter O, press shift, press Y, press SPACE, press O, press SHIFT, press U, press R, press SPACE, press SHIFT, press S, press N, press A, press C, press K, press SHIFT, press S, press SPACE, press SPACE, press SHIFT, press ENTER. The message should start scrolling when you press the mode button.

9. LANGUAGE SELECTION

To select the message language, while in the service mode, press selection button #10. The scrolling display will display "LANGUAGE". Press the letter of the language you wish to program (see list below). The language selected will be displayed or you can program your own message using button #11.

Press button #10 + button A = Italian
Press button #10 + button B = Dutch
Press button #10 + button C = Spanish
Press button #10 + button D = Danish
Press button #10 + button E = English
Press button #10 + button F = French
Press button #10 + button G = German
Press button #10 + button 11 = ADD MESSAGE

Under selection button 11, the control board will display "MESSAGE 1". Using the same overlay for the Point of Sale Programming, enter the first message "PLEASE INSERT EXACT MONEY" in the language desired, then press SHIFT, then press ENTER. Next enter PLEASE INSERT MORE MONEY in the language you desire. Then press SHIFT, then press ENTER. Enter MAKE ALTERNATE SELECTION in the desired language, then press SHIFT, then press ENTER. Now enter the message PLEASE CALL SERVICE in the language desired. Then press SHIFT, then press ENTER. The maximum length of messages one and two are thirty (30) characters each. The maximum length of message three and four is twenty five (25) characters.

10. VEND OPTIONS

To enable or disable the vend options, while in the service mode, press selection button #11. The control board will display "OPTIONS". Press one of the appropriate letters listed below. After the letter has been pressed, the current state of the option will be displayed. The option may be changed by following the instructions pertaining to that option.

A. Bill Escrow (If it is a feature of the bill validator installed)

This option will allow the last bill accepted to be escrowed, provided the bill validator is capable of such a feature. To access this, while in the service mode, press selection button #11, then press selection button "A". The feature will be displayed with its present status. To change the status press selection button "A" again.

B. Forced Vend

This option (when turned ON) will force the customer to complete a purchase once they have deposited money of any form. If a vend is attempted and the motor fails during this vend, the customer will be allowed to escrow the credit, regardless of the forced vend status. To access this option, press selection button #11, then press selection button "B". The feature will then be displayed with its present status. To change the status press selection button "B" again.

C. Maximum Change Return

This option will limit the amount of change returned to the customer. The change above the limit will be given as a credit toward another purchase, i.e. a multi-vend situation. To access this option, press selection button #11, then press selection button "C". The status of the option will be shown. If the option is "OFF", press selection button "C" again to turn it "ON". After enabling the option, wait for one second and the current limit will be displayed. This limit may be changed by pressing the most significant digit first and then the less significant digits. Press selection button #10 to lock in this limit.

Note: The only time that the control board will display the amount of the limit is when the feature is first turned on. In order to check the amount set, turn the feature "OFF" and then "ON".

To exit this mode, press the service mode button.

D. To Set Control Board Time and Date

This option will allow the control board to set the time and date for timed operations. Should you lose power to the machine, a back-up battery will maintain the correct time and date.

To access this option, press selection button #11, then press selection button "D". The current status of the option will be displayed. To change the option, release button "D" and press it again. The selection will then change. When the option is turned "ON" the current time of day will be displayed in a 24 hour format (1 PM would be 1300) as TIME hh.mm. A new time may be entered by pressing the selection buttons on the front of the machine which will be displayed as they are pressed. The most significant digit followed by lesser significant. Example: 1325 would be entered by pressing selection button #1, selection #3, selection button #2, then selection button #5. To save this entry, press selection button #10. The current month will then be displayed in a numeric format as example: "MONTH 03" (03=March). A new month may be entered by pressing the selection buttons. As each button is pressed it will be displayed on the display. The most significant digit should be entered followed by lesser significant digit. It is not necessary to enter the leading zeros and only the first two numbers will be used. To save this entry press selection button #10. The current day of the week will be displayed in a numeric format as DAY dd. The numbers start with Sunday as 1 and on through to Saturday as 7. A new day may be entered by pressing the selection number keys which will be displayed as they are entered. Enter the most significant digit followed by the less significant. It is not necessary to enter leading zeros and only the first two numbers will be used. To save this entry press selection button #10. The current year will now be displayed as YEAR yy in a numeric format. A new year may be entered by pressing the selection number keys which will be displayed as they are entered. The most significant digit should be entered first followed by the less significant. To save this entry press selection button #10. To cancel unwanted setting before saving, press selection button #13.

E. Setting Time Shut Down of Machine

This option will allow the control board to shut down the entire machine up to four times during a 24 hour period. During these time intervals the point of sales message will read: "VENDING OPERATION TO RESUME AT hh.mm".

To avoid confusion with this option when the time is set to start that is the time the machine will shut down. When the time is set to stop, that is the time the machine is turned on.

To set this option after going into the service mode, press selection button #11, then press selection button "E". The current on/off setting will be displayed as "TIME xxxx". To change the current on/off setting press selection button "E" again. With the setting to "ON" position, to program the start, stop and active days for the time to occur, wait one second and the display will continue to "1STRT hh.mm".

A new start time (time the machine will shut down) for this interval may be entered by pressing the selection button numbers, which will be displayed as the number buttons are pressed. The most significant digit is entered first followed by the lesser significant digits. Only the first four numbers will be used and can be saved by pressing selection button #10. The display will continue to the daily on/off status (the days you want this time to occur) shown as 1DYxxxxxxx. The x's will be either a "0" for "OFF" or a "1" for "ON". The first x will show the status of Sunday, the next x for Monday, and so on, until Saturday. The daily status may be changed by pressing the 0 or 1 keys. Each digit will be rotated in from the left side. To save this entry, press selection button #10. The display will continue to the next time set up as 2STRT hh.mm. Repeat the procedure above for this set up and the two additional ones if required. When all four intervals have been programmed the control board will return to the service mode. To avoid confusion, again the start time is when the machine is going to be turned "OFF" and the stop time is going to be when the machine is turned "ON".

F. ONE FREE PRODUCT SETTING

This option will allow a free product to be given to the customer at a preprogrammed interval. Setting this interval to 1 provides a free vend at every transaction, "0" disables the option and the maximum valid interval is 255.

To access this option, press selection button #11, then press selection button F. The current interval will be displayed as "FREE xxx". A new interval may be entered by pressing the selection button number, which will be displayed as they are entered. The most significant digit is entered first followed by the lesser significant digits. It is not necessary to enter leading zeros and only the first four numbers will be displayed and used. To save this entry press selection button #10.

To cancel an unwanted setting before saving, press selection button #13.

G. PROMOTIONAL VEND SETTING

This option will allow a promotional product to be given to a customer free in response to the purchase of another product. When enabled, purchasing selection "0" from one of the two possible promotional rows will result in both the selection chosen and a promotional item of that row to vend sequentially.

To access this option, press selection button #11, then press selection button "G". This will toggle the on/off state. To program the promotional rows, after enabling the option as above, wait 1 second and the display continues to "ROWS xx". New rows may be entered by pressing the alphabetic selection buttons of the desired row. The first entry will effect the center character and the second will effect the right most character. Pressing selection button #12 before #10 will clear both entries. Press selection button #10 to save the entry. If the E row has been selected, then when selection E-1 is chosen, then that selection will vend, then selection E-0 will vend giving a free item.

To cancel an unwanted setting before saving, press selection button #13.

CLEANING AND MAINTENANCE

PAINTED SURFACES

All painted surfaces and the vinyl covered product delivery door can be cleaned with a clean cloth and any common brand of household detergent. Do not use harsh abrasive materials on these surfaces, they will scratch the paint or vinyl.

GLASS ITEMS

The glass product loading door may be cleaned with any commercial window cleaner.

TRAY SURFACES

Quite ofter wax and oil will build up on the tray surface area. To remove this, use a wax and paraffin remover solution.

POLYVEND SHIPPING POLICY

The following information is to assist you in assuring safe delivery of your merchandise and in expediting of freight damage claims.

Our terms of sale are F.O.B. our factory. The responsibility for damage in transit is the carrier's whether it be visible or concealed damage. We have taken every precaution to ensure safe arrival of this equipment, but our responsibility ceases the moment the shipment is turned over to the carrier.

Acceptance of this shipment by the carrier is an acknowledgment that the equipment was delivered to them in good condition and properly packed. The carrier who delivers this merchandise to your door is responsible for its safe delivery.

PROCEDURE FOR VISIBLE DAMAGE

1. IT IS VERY IMPORTANT TO INSPECT ALL FREIGHT DELIVERIES, WHETHER MACHINES OR PARTS, IMMEDIATELY. If there is any visible damage you have the right to either refuse the merchandise or accept the damaged shipment. If you accept, make certain that you have the delivery personnel note the nature and extent of the damage on the freight bill.

2. After you determine the extent and cost of the damage, notify the delivering carrier's office by phone and confirm with a written notice within 15 days requesting an inspection of the damaged merchandise. Keep a copy of the inspection request for claim purposes. Do not destroy the packing material until shipment is inspected and claim is settled.

3. When the inspector arrives, ask for a claim form. In filing a claim, you may make a cash settlement with the carrier for the full invoice price of the merchandise or contact Polyvend Inc., at 1-800-710-8368 and make arrangements to have merchandise returned for repair and file a claim for repair charges. Do not return "DEADHEAD". Do not claim more than the cash price of the machine, plus freight.

PROCEDURE FOR CONCEALED DAMAGE

1. If there is no visible damage, YOU MUST OPEN THE SHIPMENT WITHIN 15 DAYS AND INSPECT FOR CONCEALED DAMAGE. If there is concealed damage, notify the delivering carrier by phone immediately asking for an inspection. Confirm the request in writing and keep a copy for claim purposes. If you fail to notify the carrier within 15 days of delivery, by telephone and in writing, the freight company is no longer liable for damage and will probably refuse your claim. Do not destroy packing material until shipment is inspected and claim is settled.

2. After inspection by the carrier, file a claim for damages at once. On concealed damage, unless it can be proven that the carrier is responsible for the damage, they will probably want to settle on a compromise basis. Therefore, the faster you inspect your delivery and notify the carrier, the better the chances for full settlement. If the claim is disallowed, check on the possibility of a compromise.

PROCEDURE FOR SHORTAGES

1. If the shipment delivered to you is not in accordance with the quantity of cartons shown on your receipt, do not accept it until shortages are noted on the Freight Bill or Bill of Lading and signed by the truck driver. Failure to do this releases the carrier from any responsibility,

2. If the shorted item is not delivered within a reasonable time, file a claim with the delivering carrier for the invoice or cash price of that item.

Note: Claims for loss or damage will NOT BE DEDUCTED FROM YOUR INVOICE while you wait adjustment of such claims.

TROUBLE SHOOTING CHART

CAUTION

DISCONNECT ANY POWER TO MACHINE (BEFORE CHANGING, DISCONNECTING OR CONNECTING ANY ELECTRICAL COMPONENTS) BY TURNING OFF THE INTERLOCK SAFETY SWITCH OR UNPLUGGING THE MACHINE.

SYMPTOM	PROBABLE CAUSE	CORRECTIVE ACTION
1. All coins deposited are rejected	Machine not level	Level cabinet
In service mode, shows error 3	Defective coin mech.	Replace coin mech.
	Display blank, power indicator lights not illuminated	Check circuit breaker, power at wall outlet and transformer
2. Selection motor fails to run	Insufficient credit established	Check to see that selection price is same as deposited amount. Note message on display
In service mode display shows selection and error 1	Defective motor assembly	Service vend bad motor. Replace if defective. See note 2, pg. 25.
	Defective control board	Replace control board. See note 1 below.
3. All selection motors do not run	Defective control board	Replace control board. See note 1 below.
(Test or service vend) Power indicator light illuminated	Wire connection broker	Trace wire harness. For color code see note 3 pg 26
4. Selection motor does not complete cycle. In service mode display shows error 2 *continued on pg. 24*	Defective full cycle switch or defective motor.	Replace motor assembly. See note 2 pg 25.

Note: When you replace the control board, always disconnect power to the equipment. After the control board is installed, reapply power, go into the service mode and press button #2, then press button #3. You have now aligned the control board with the motors.

SYMPTOM	PROBABLE CAUSE	CORRECTIVE ACTION
	Defective components on motor PC board assembly. Defective control board.	Replace motor assembly. See note 2, pg. 25. Replace control board. See note 2 pg. 25.
5. Selection motor continuously cycles shows error code 2 in service mode	Defective full cycle switch Defective control board.	Replace motor assembly Replace control board.
6. Two motors run simultaneously	Defective control board Defective motor assembly Defective tray distribution board. Shorted harness or wire connector.	Replace control board. See note 1 pg 23. Replace motor assembly Replace tray distribution board. Repair or replace
7. Unable to make a selection. Either no selection number on display or wrong number	Selector pad bad. Attempt to change price of a selection. Unable to change price.	Replace selector pad.
8. Insert dollar bill, shows credit, no product dispensed	Defective control board	Replace control board. See note 1 pg. 23.
9. Dollar bill validator will not accept dollar bills	Bill scanner dirty Not enough coins in coin changer Defective coin changer Defective bill validator	Clean scanner area Fill changer with coins Replace changers Replace bill validator
10. Insert dollar bill, does not show credit, can not make a selection	Defective bill validator	Replace bill validator

SYMPTOM	PROBABLE CAUSE	CORRECTIVE ACTION
11. Display is blank, power indicator light not on, fluorescent light on	Circuit breaker tripped 24 volts.	Check circuit breaker. Reset if tripped.
12. Display is blank, power indicator light on.	Defective control board	Replace control board. See note 1 pg. 23.
13. Coin mech. returns nickels and dimes with no product vended	Defective control board	Replace defective control See note 1 pg. 23.
In service mode display shows error 3.	Defective changer	Replace changer
Coins fall through coin mechanism. No credit given.	Defective changer	Replace changer

Note 2: When replacing a bad motor, always service vend the new motor to tell the control board that a new motor has been installed.

NOTE 3: The motors in the machine are arranged in a 7 x 10 matrix. This means that all motors have a wire common to all other motors in that row. Example: All motors in horizontal row "A" have a white wire with a black stripe in common. Likewise, all the motors in a vertical column have a wire in common. Example: All motors in column 2 have a red wire in common.

The following is the wire color guide for the motor matrix:

	Wire Color
Row "A"	White/Black
Row "B"	White/Brown
Row "C"	White/Red
Row "D"	White/Orange
Row "E"	White/Yellow
Row "F"	White/Black
Row "G"	White/Orange

Tray harnesses use only the White/Black since since they can be used in any row.

Column "0"	Black
Column "1"	Brown
Column "2"	Red
Column "3"	Orange
Column "4"	Yellow
Column "5"	Green
Column "6"	Blue
Column "7"	Violet
Column "8"	Grey
Column "9"	White

ERROR CODES

1. Error 1 = Too little motor current
2. Error 2 = Too much time to complete the vend (6 seconds).
3. Error 3 = The control board has lost communications with the changer (changer has malfunctioned).
4. Error 4 = EEPROM sum check error.

NOTE: Error 4 = Prices have been inadvertently altered and all prices have been automatically set to maximum by the control board. To clear these prices, reset pricing as desired.

DIAGRAMS AND PARTS LISTS

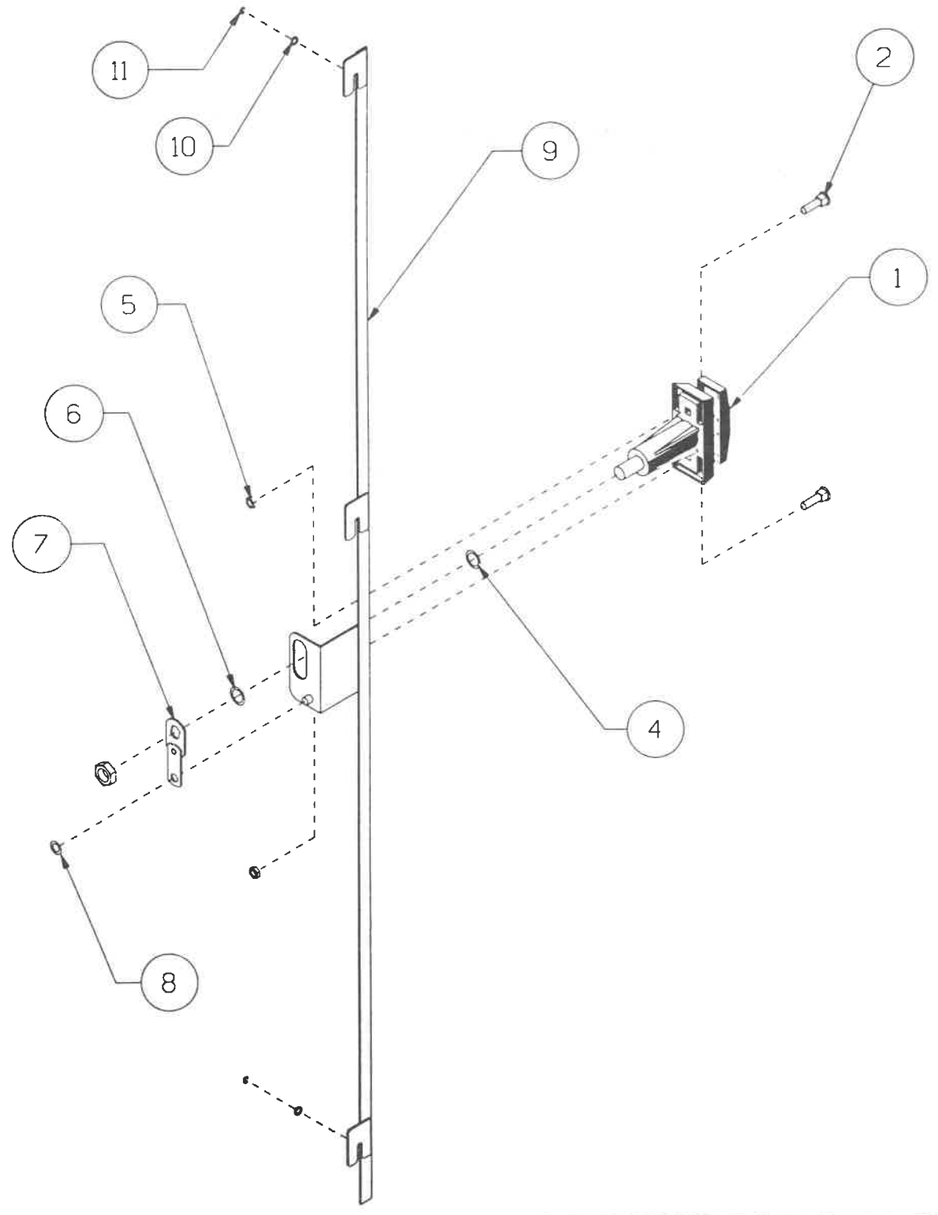

LOCKING BAR ASSEMBLY

LOCKING BAR ASSEMBLY PARTS LIST

ITEM	DESCRIPTION	PART NO.	QTY.
1	"T" HANDLE LOCK	170-8003	1
2	CARRIAGE BOLT #10-24 UNC X 1/2	S26C1024-8	2
3	NOT REQUIRED		
4	DOUBLE "D" WASHER	170-4089	1
5	NUT, HEX W/LOCKWASHER #10-24	N20C1024	2
6	SPACER BUSHING	170-6008	1
7	DRIVE CAM AND LEVER ASSEMBLY	170-5028	1
8	RETAINING RING, 5/16	R12K312	1
9	LOCK BAR ASSEMBLY, "T" HANDLE	230-5026	1
10	FLAT WASHER, #10	W10C10	2
11	RETAINING RING, 3/16	R10K187	2

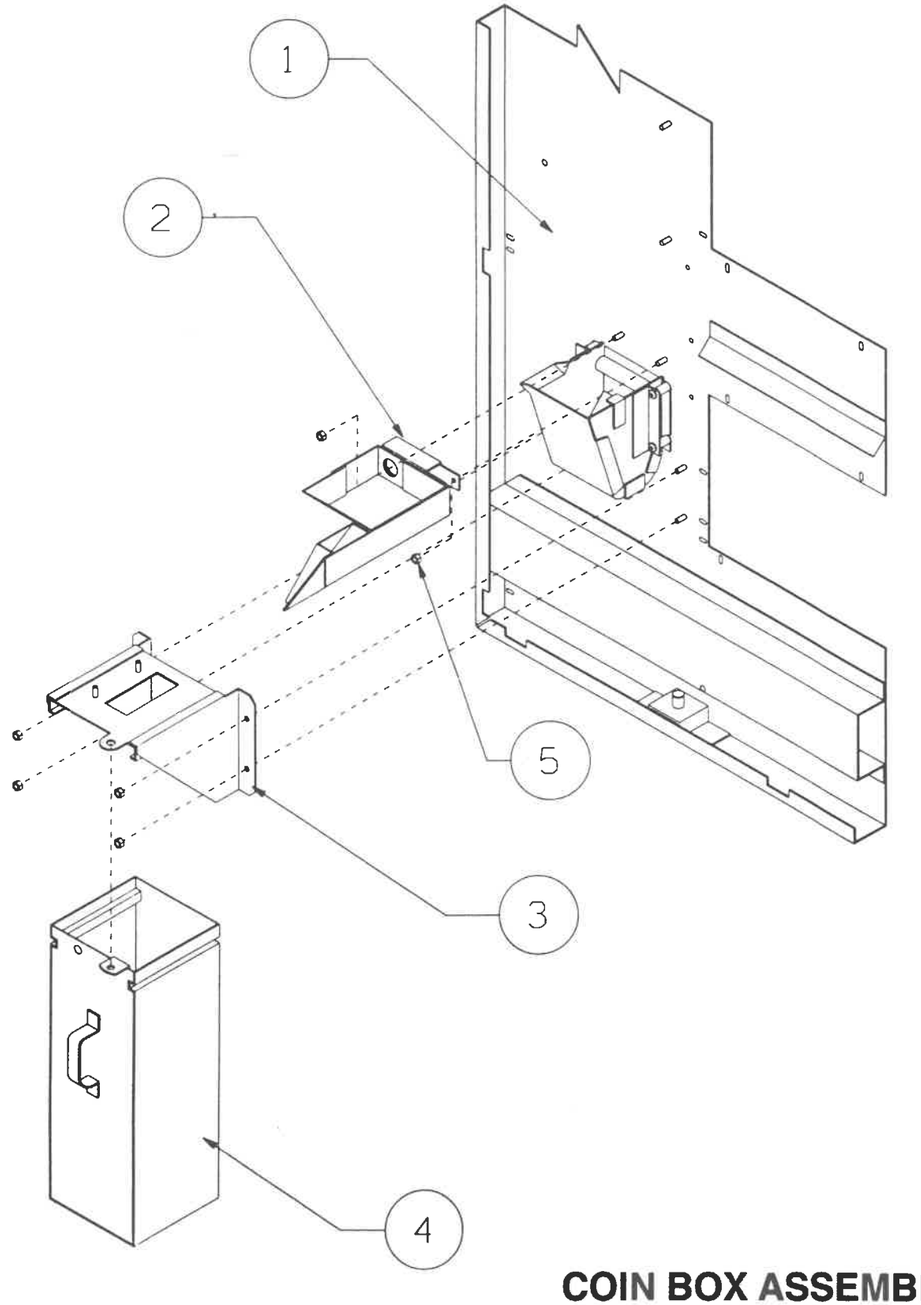

COIN BOX ASSEMBLY

COIN BOX ASSEMBLY PARTS LIST

ITEM	DESCRIPTION	PART NO.	QTY.
1	DOOR WELD ASSEMBLY "C" W/INTERNATIONAL CONTROLLER	099-5534	1
2	HOPPER, COIN, WELD ASSEMBLY	099-558501	1
3	RETAINER, CASH BOX	098-5292	1
4	CASH BOX ASSEMBLY	210-5080	1
5	NUT, HEX W/LOCKWASHER #8-32	20208	6

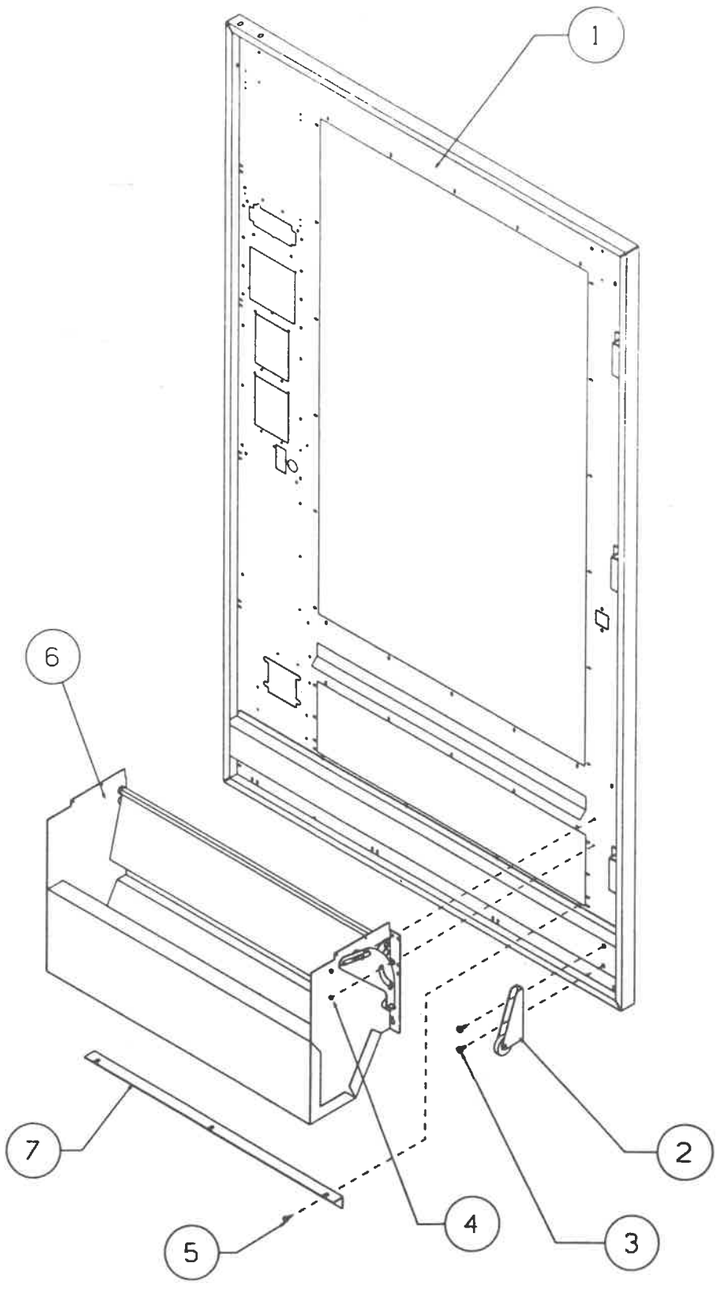

DELIVERY COMPARTMENT ASSEMBLY

DELIVERY COMPARTMENT ASSEMBLY PARTS LIST

ITEM	DESCRIPTION	PART NO.	QTY.
1	DOOR WELD ASSEMBLY "C" W/INTERNATIONAL CONTROLLER	099-5534	1
2	DOOR SUPPORT ROLLER ASSEMBLY	150-5244	1
3	SCREW W/LOCKWASHER, #1/4-20 X 1/2	S20C2520-8	2
4	NUT, HEX W/LOCKWASHER, #8-32	20208	4
5	SCREW, TAPPING, #8-18 X 3/8	S40C818-6	3
6	DELIVERY TRAY ASSEMBLY "B"	099-5016	1
	DELIVERY TRAY ASSEMBLY "C"	099-5017	1
7	SUPPORT - DELIVERY TRAY "B"	240-4022	1
	SUPPORT - DELIVERY TRAY "C"	240-4025	1

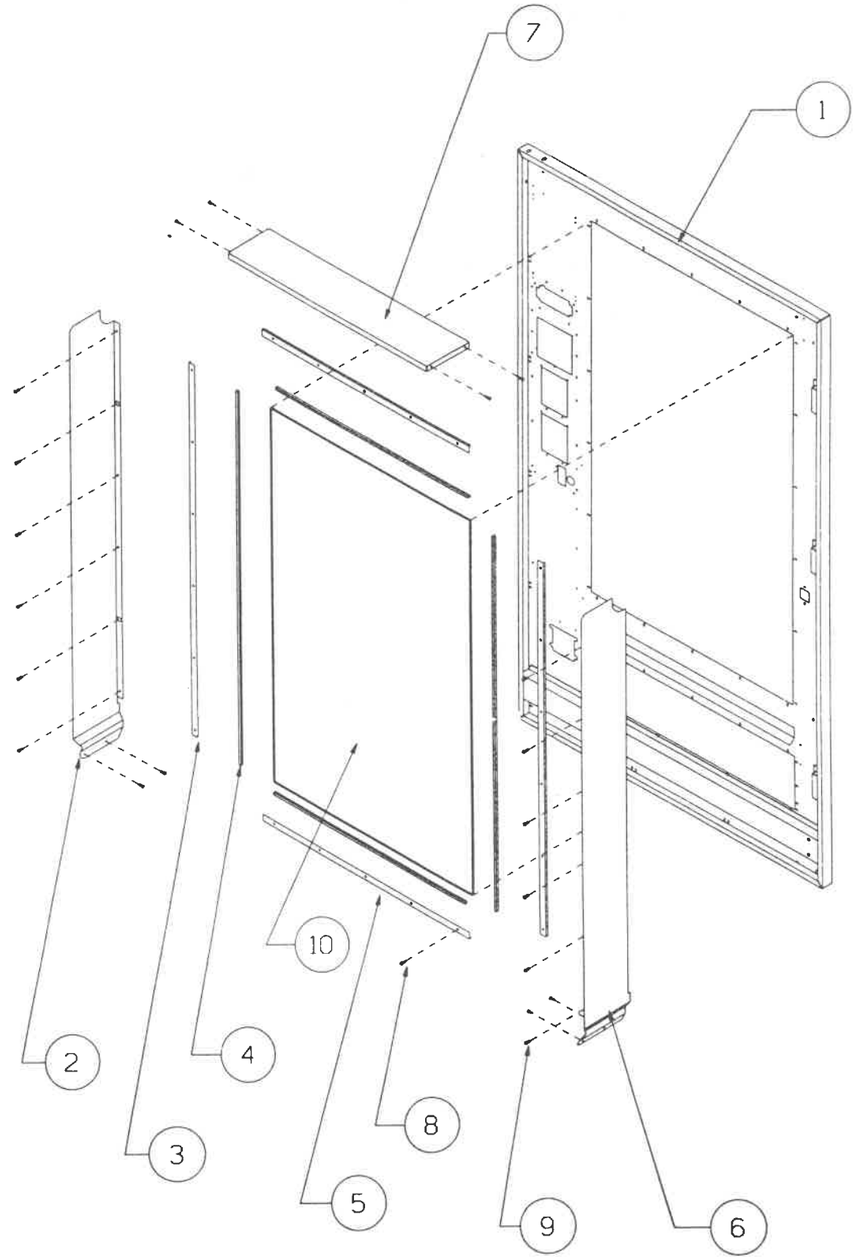

DOOR GLASS ASSEMBLY

Polyvend® INC.

DOOR GLASS ASSEMBLY PARTS LIST

ITEM	DESCRIPTION	PART NO.	QTY.
1	DOOR WELD ASSEMBLY "C" W/INTERNATIONAL CONTROLLER	099-5534	1
2	L.H. PRODUCT GUIDE	099-4010	1
3	GLASS RETAINER, L/R	099-4003	1 ea.
4	DISPLAY GLASS GASKET	220-9007	12.530 FT.
5	GLASS RETAINER, TOP/BOTTOM "B" MODEL	240-4023	2
	GLASS RETAINER, TOP/BOTTOM "C" MODEL	210-4052	2
6	R.H. PRODUCT GUIDE	099-4011	1
7	SUPPORT, TOP, PRODUCT GUIDE, "B" MODEL	240-4024	1
	SUPPORT, TOP, PRODUCT GUIDE, "C" MODEL	224-4022	1
8	SCREW, TAPPING, #8-18 X 3/4	S39C818-12	10
9	SCREW, TAPPING, #8-18 X 3/8	S40C818-6	26
10	DISPLAY GLASS "B" MODEL 21 3/8 X 43 1/8 X 3/16	099-9008	1
	DISPLAY GLASS "C" MODEL 26 7/8 X 43 1/8 X 3/16	099-9009	1

LIGHT ASSEMBLY

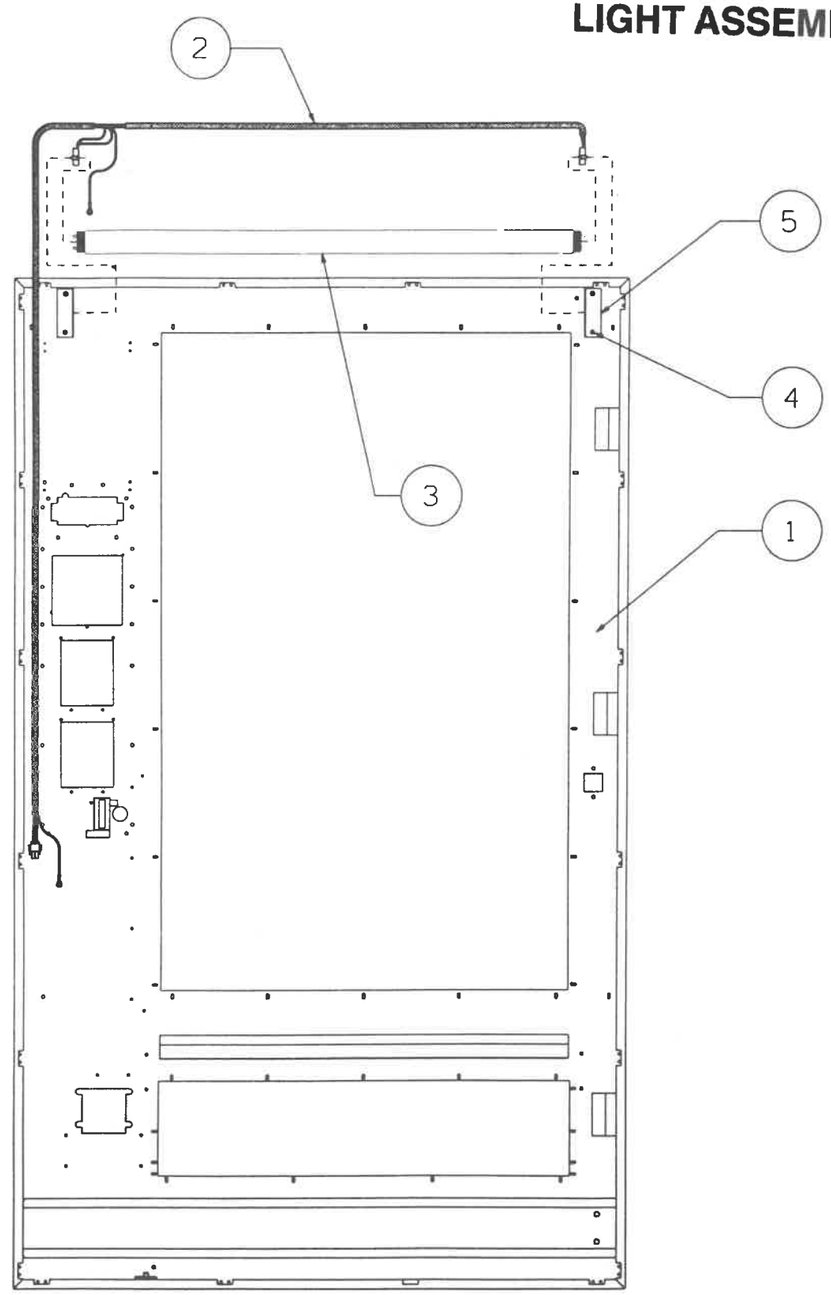

LIGHT ASSEMBLY PARTS LIST

ITEM	DESCRIPTION	PART NO.	QTY.
1	DOOR WELD ASSEMBLY "C" W/INTERNATIONAL CONTROLLER	099-5534	1
2	DISPLAY LIGHT HARNESS	230-5028	2
3	LAMP - 20 WATT FLUORESCENT "B"	099-8173	1
	LAMP - FLUORESCENT, F25T12-CW	150-8023	1
4	NUT, HEX S/LOCKWASHER, #8-32	20208	4
5	DISPLAY LIGHT BRACKET	220-4069	2

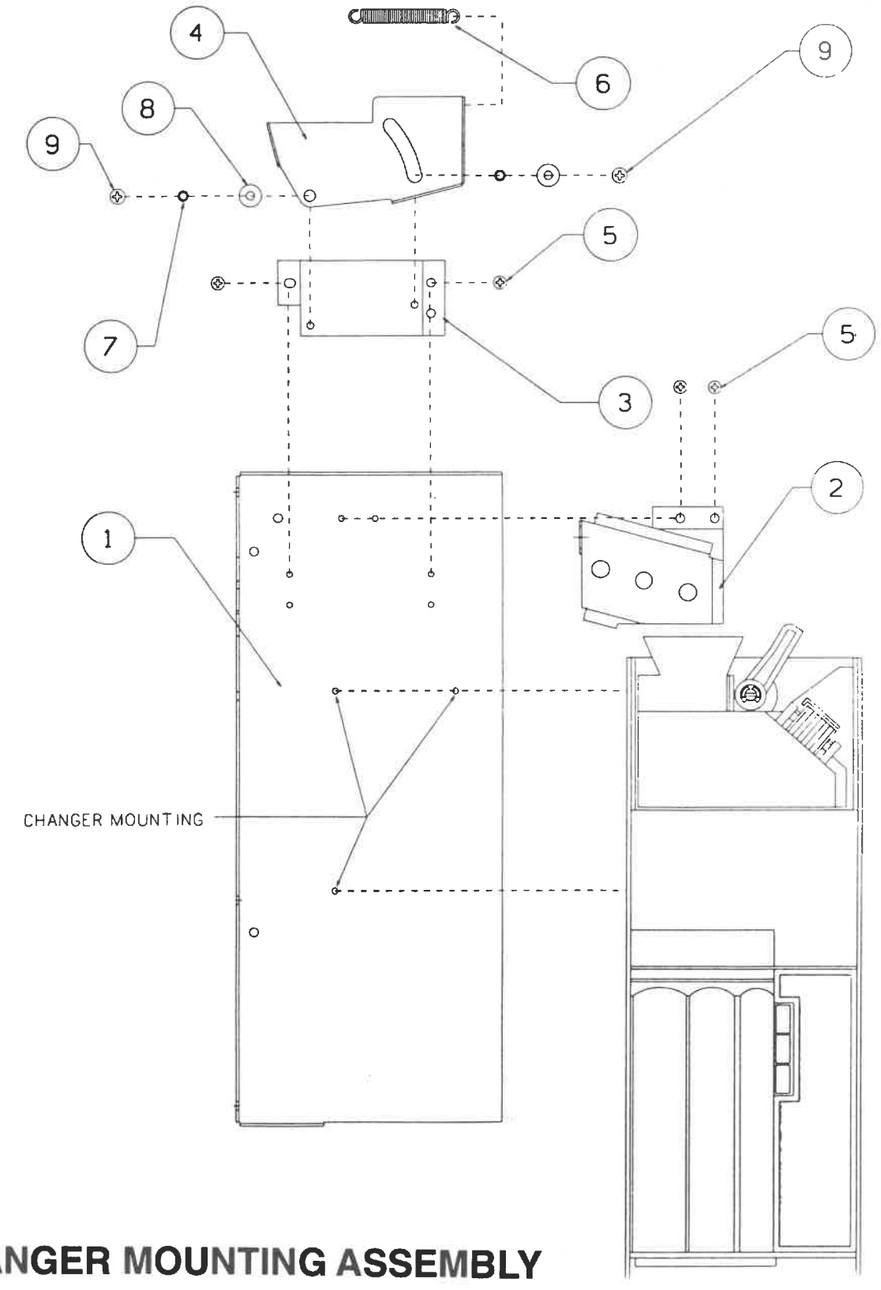

CHANGER MOUNTING ASSEMBLY

CHANGER MOUNTING ASSEMBLY PARTS LIST

ITEM	DESCRIPTION	PART NO.	QTY.
1	PANEL WELD ASSEMBLY, COIN MECH. MOUNTING	098-5339	1
2	UPPER COIN CHUTE WELD ASSEMBLY	099-5542	1
3	BRACKET - REJECT SPACER	21316	1
4	COIN REJECT LEVER	098-5323	1
5	SCREW, #8-18 X 3/8, TAPPING, PHILLIPS, PANHEAD	01298BLK	4
6	SPRING, EXTENSION	00611	1
7	SPACER	22201	2
8	WASHER, FLAT, SPECIAL	W10C25	2
9	SCREW, TAPPING, #10-24 X 1/2, PNHD. PH	22482	2
10	CHANGER - "COINCO" CA9302LF (OPTIONAL)	21240	1

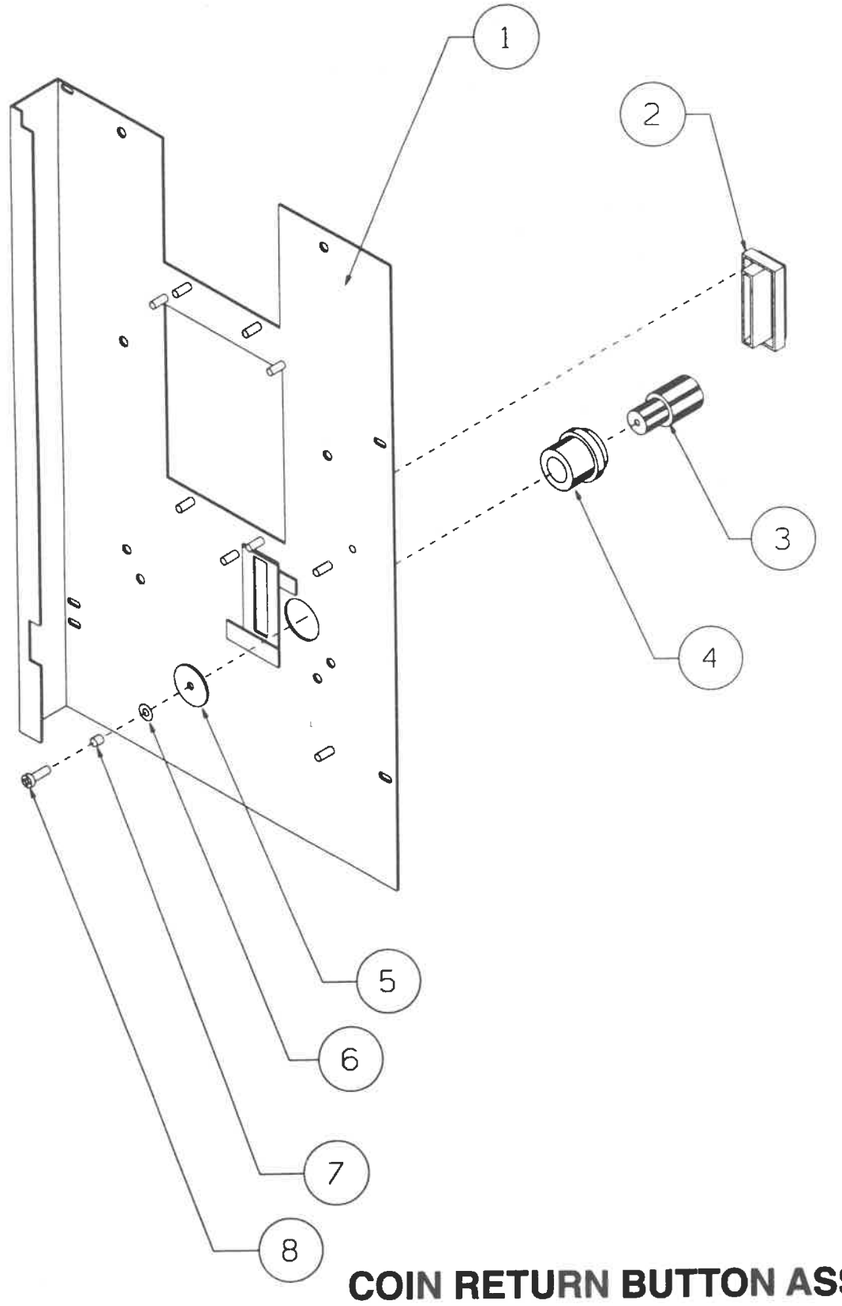

COIN RETURN BUTTON ASSEMBLY

COIN RETURN BUTTON ASSEMBLY PARTS LIST

ITEM	DESCRIPTION	PART NO.	QTY.
1	DOOR WELD ASSEMBLY, "C" W/INTERNATIONAL CONTROLLER	099-5534	1
2	INLET, COIN	17948	1
3	BUTTON, COIN REJECT	21125	1
4	BUSHING - COIN REJECT	21126	1
5	WASHER	16154	1
6	WASHER, #8 X .188	13419	1
7	SPACER	22201	1
8	SCREW, 38-18 X 1/2	02614BLK	1

Polyvend® INC.

COIN RETURN CUP / DOOR HINGE ASSEMBLY

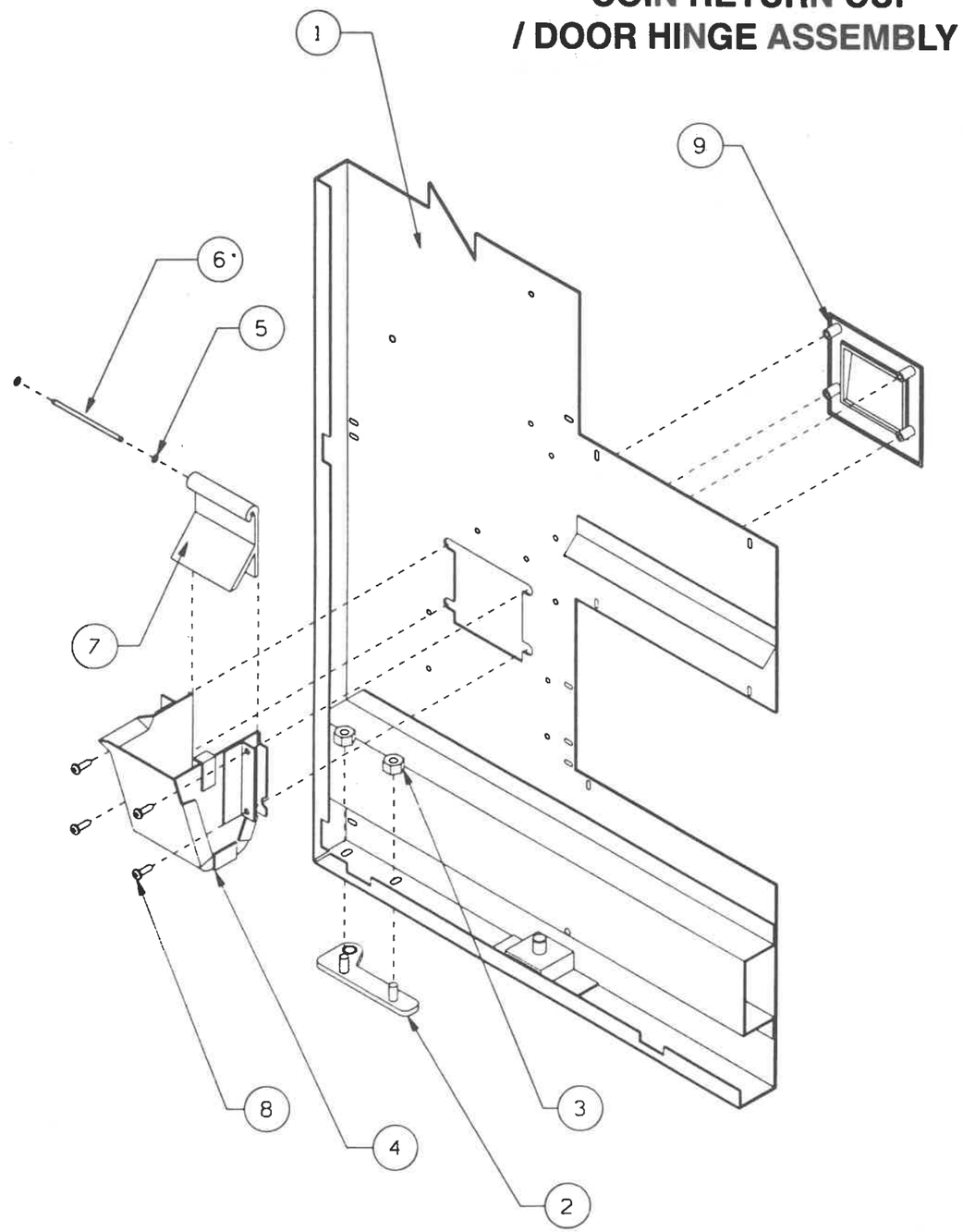

COIN RETURN CUP / DOOR HINGE ASSEMBLY PARTS LIST

ITEM	DESCRIPTION	PART NO.	QTY.
1	DOOR WELD ASSEMBLY, "C" W/INTERNATIONAL CONTROLLER	099-5534	1
2	HINGE ASSEMBLY - BOTTOM	150-5313	1
3	NUT, HEX, #14-20, KEPS	N20C2520	2
4	COIN RETUNR CUP ASSEMBLY	001-5132	1
5	E-RING, .125	R10K125	2
6	COIN RETURN PIN	099-6010	1
7	COIN RETURN DOOR	001-2004	1
8	SCREW, #8-18 X 3/8	39C818-6	4
9	COIN RETURN, FRONT	001-2003	1

CABINET ASSEMBLY

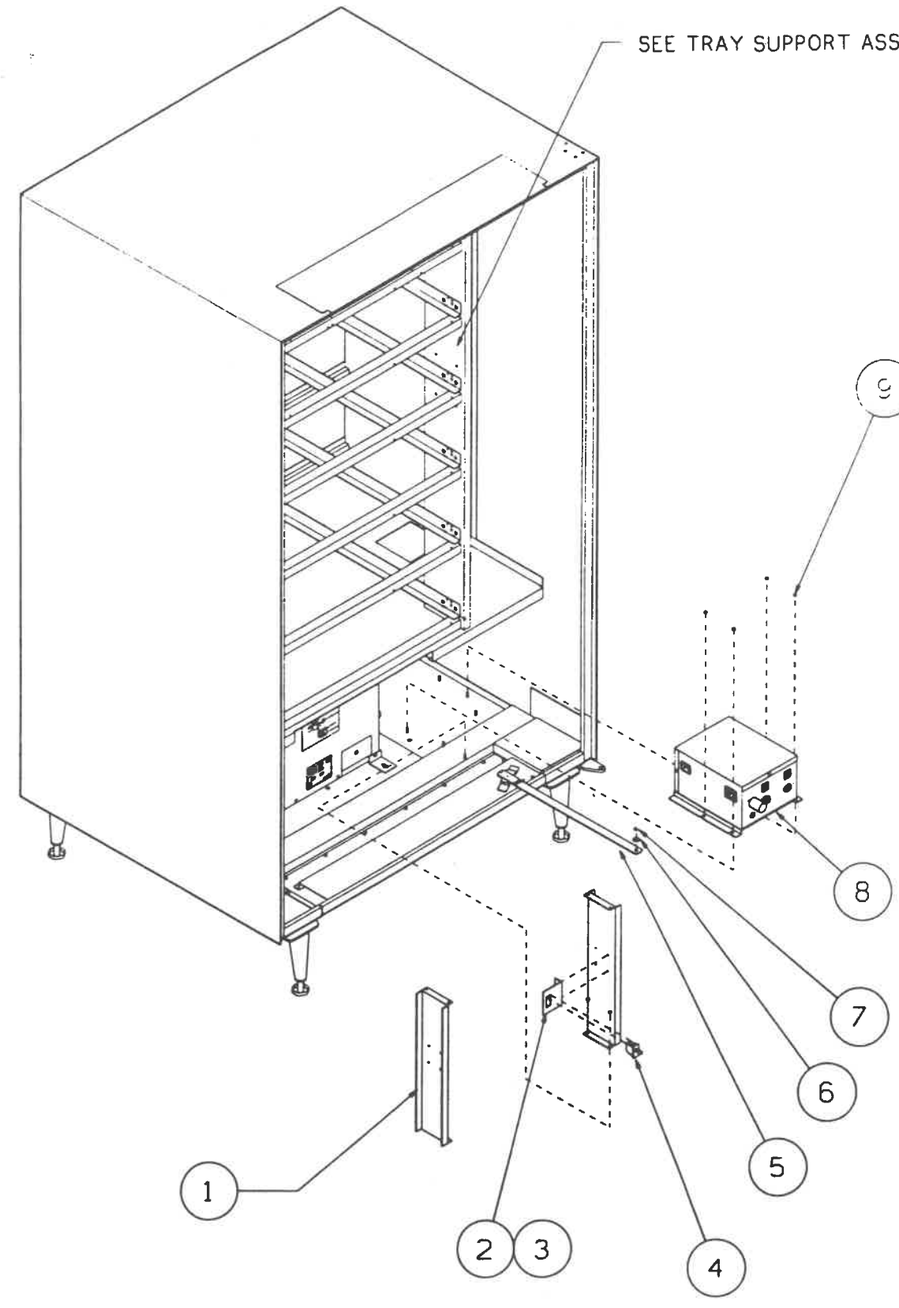

CABINET ASSEMBLY
PARTS LIST

ITEM	DESCRIPTION	PART NO.	QTY.
1	SUPPORT - MAIN SHELF	099-4159	2
2	DOOR SWITCH BRACKET	099-4083	1
3	SCREW, #8-32 X 1/4	S42C832-4	2
4	DOOR SWITCH	099-8037	1
5	STOP ARM ASSEMBLY	210-5076	1
6	WASHER. 5/16	W10C312	1
7	RETAINING RING, 5/16	R10K312	1
8	POWER BOX ASSEMBLY, "B"/"C"	099-5546	1
9	NUT, HEX W/LOCKWASHER, #8-32	20208	4

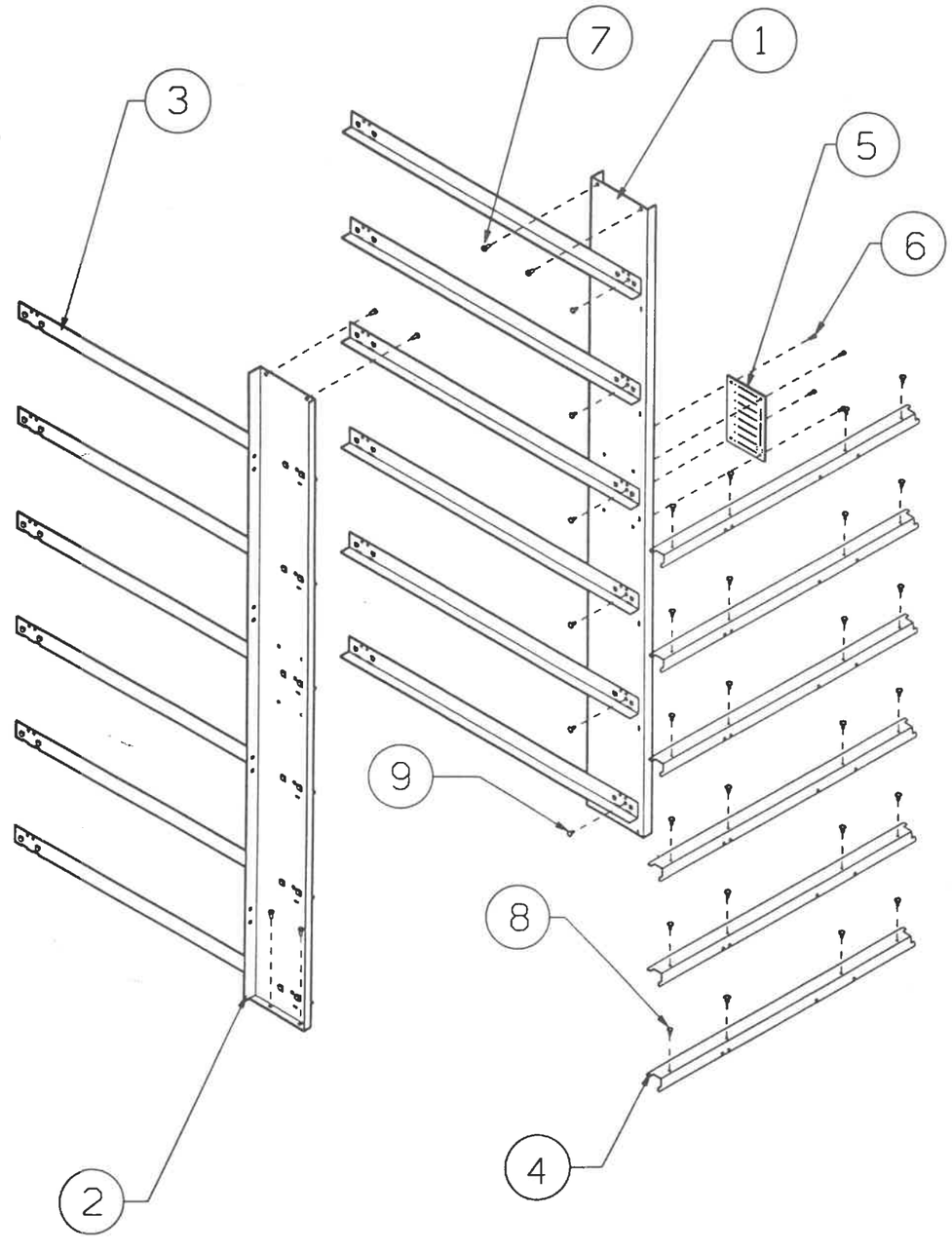

TRAY SUPPORT ASSEMBLY

TRAY SUPPORT ASSEMBLY
PARTS LIST

ITEM	DESCRIPTION	PART NO.	QTY.
1	L.H. SUPPORT -TRAY FRAME	099-4064	1
2	R.H. SUPPORT - TRAY FRAME	099-4065	1
3	TRACK - UNIVERSAL	099-4160	12
4	TRAY FRAME, FRONT, TRACK SUPPORT, "B"	240-4050	6
	TRAY FRAME, FRONT, TRACK SUPPORT, "C"	224-4046	6
5	P.C. BOARD, "B"/"C"	2142402	1
6	SCREW, MACHINE, PANHEAD PHILLIPS, #6-32 X 3/8	00302	4
7	SCREW, #10-32 X 3/8	S20C1032-8	4
8	CANOE CLIP, .060 ROUNDHEAD	210-8012	18
9	CANOE CLIP, .100 ROUNDHEAD	210-8021	12

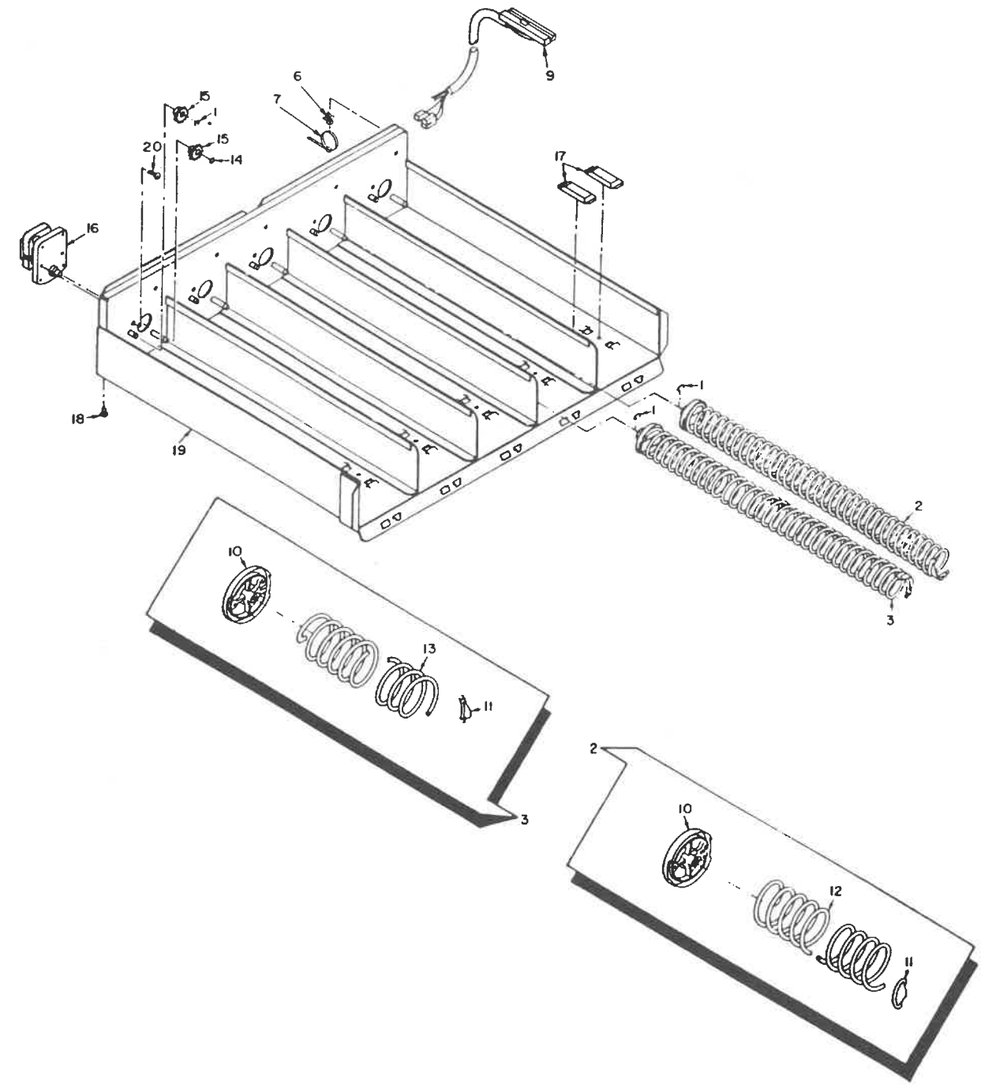

TOP TRAY ASSEMBLY COMPLETE

TOP TRAY ASSEMBLY COMPLETE

ITEM	DESCRIPTION	PART NO.	QTY.
1	RETAINING RING 5/16	R10K312	15
2	R. H. SPRING AUGER ASSEMBLY - 1 3/4" PITCH	210-5125	5
3	L. H. SPRING AUGER ASSEMBLY - 1 3/4" PITCH	210-5126	5
6	PUSH MOUNT	099-8062	1
7	TY RAP	001-8103	1
9	TRAY WIRE HARNESS - 5 COLUMN	2146401	1
10	DRIVE GEAR - HELIX	210-3006	10
11	EJECTRO	210-3020	10
12	R.H. SPRING AUGER - 1 3/4" PITCH	210-7011	5
13	L. H. SPRING AUGER - 1 3/4" PITCH	210-7012	5
14	PUSHNUT	210-8017	5
15	DRIVE GEAR	210-3005	10
16	DRIVE MOTOR	099-8017	5
17	WEAR PAD	210-3010	10
18	CANOE CLIP .100 ROUND HEAD	210-8021	3
19	MAIN TRAY WELDMENT - 4 COLUMN TOP	099-5052	0
	MAIN TRAY WELDMENT - 5 COLUMN TOP	099-5054	1
20	SCREW NO. 8-32 X 3/8	S41C832-6	10

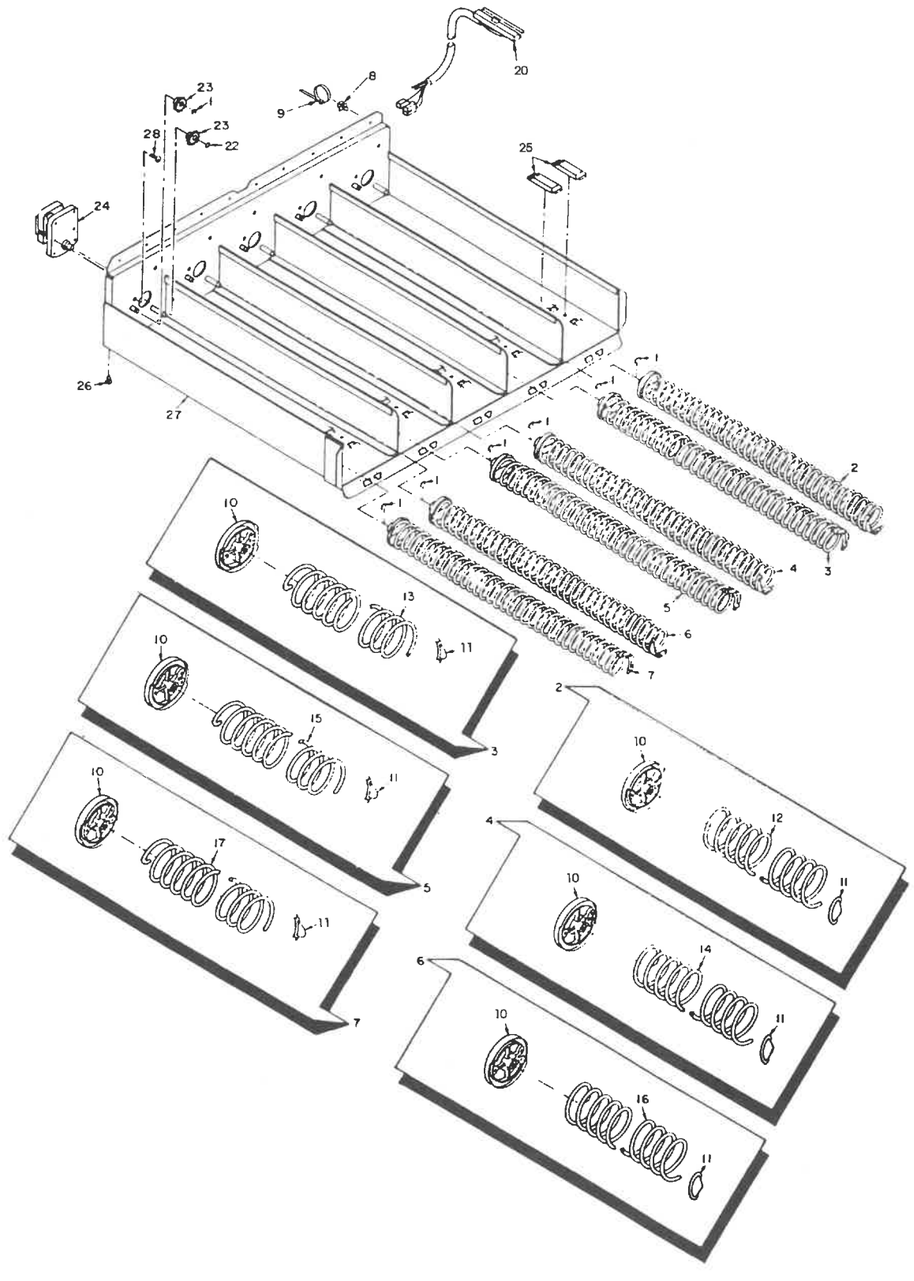

WIDE COLUMN TRAY ASSEMBLY

WIDE COLUMN TRAY ASSEMBLY

ITEM	DESCRIPTION	PART NO.	QTY.
1	RETAINING RING 5/16	R10K312	15
2	R. H. SPRING AUGER ASSEMBLY - 1 1/2" PITCH	210-5123 14 Ct	0-5
3	L. H. SPRING AUGER ASSEMBLY - 1 1/2" PITCH	210-5124 14	0-5
4	R. H. SPRING AUGER ASSEMBLY - 1 3/4" PITCH	210-5125 12	0-5
5	L. H. SPRING AUGER ASSEMBLY - 1 3/4" PITCH	210-5126 12	0-5
6	R. H. SPRING AUGER ASSEMBLY - 2" PITCH	210-5127 10	0-5
7	L. H. SPRING AUGER ASSEMBLY - 2" PITCH	210-5028 10	0-5
8	PUSH MOUNT	099-8062	1
9	TY RAP	001-8103	1
10	DRIVE GEAR - HELIX	210-3006	10
11	EJECTOR	210-3020	10
12	R.H. SPRING AUGER - 1 1/2" PITCH	210-7015	0-5
13	L. H. SPRING AUGER - 1 1/2" PITCH	210-7016	0-5
14	R.H. SPRING AUGER - 1 3/4" PITCH	210-7011	0-5
15	L. H. SPRING AUGER - 1 2/4" PITCH	210-7012	0-5
16	R.H. SPRING AUGER - 2" PITCH	210-7017	0-5
17	L. H. SPRING AUGER - 2" PITCH	210-7018	0-5
20	TRAY WIRE HARNESS - 5 COLUMN	2146401	1
22	PUSHNUT	210-8017	5
23	DRIVE GEAR	210-3005	10
24	DRIVE MOTOR	099-8017	5
25	WEAR PAD	210-3010	10
26	CANOE CLIP .100 ROUND HEAD	210-8021	3
27	MAIN TRAY WELDMENT - 4 COLUMN TOP	099-5053	0
	MAIN TRAY WELDMENT - 5 COLUMN TOP	099-5055	1
28	SCREW NO. 8-32 X 3/8	S41C832-6	10

Spiral No Hub

R 210-5131 6 Ct
L 210-5132 6

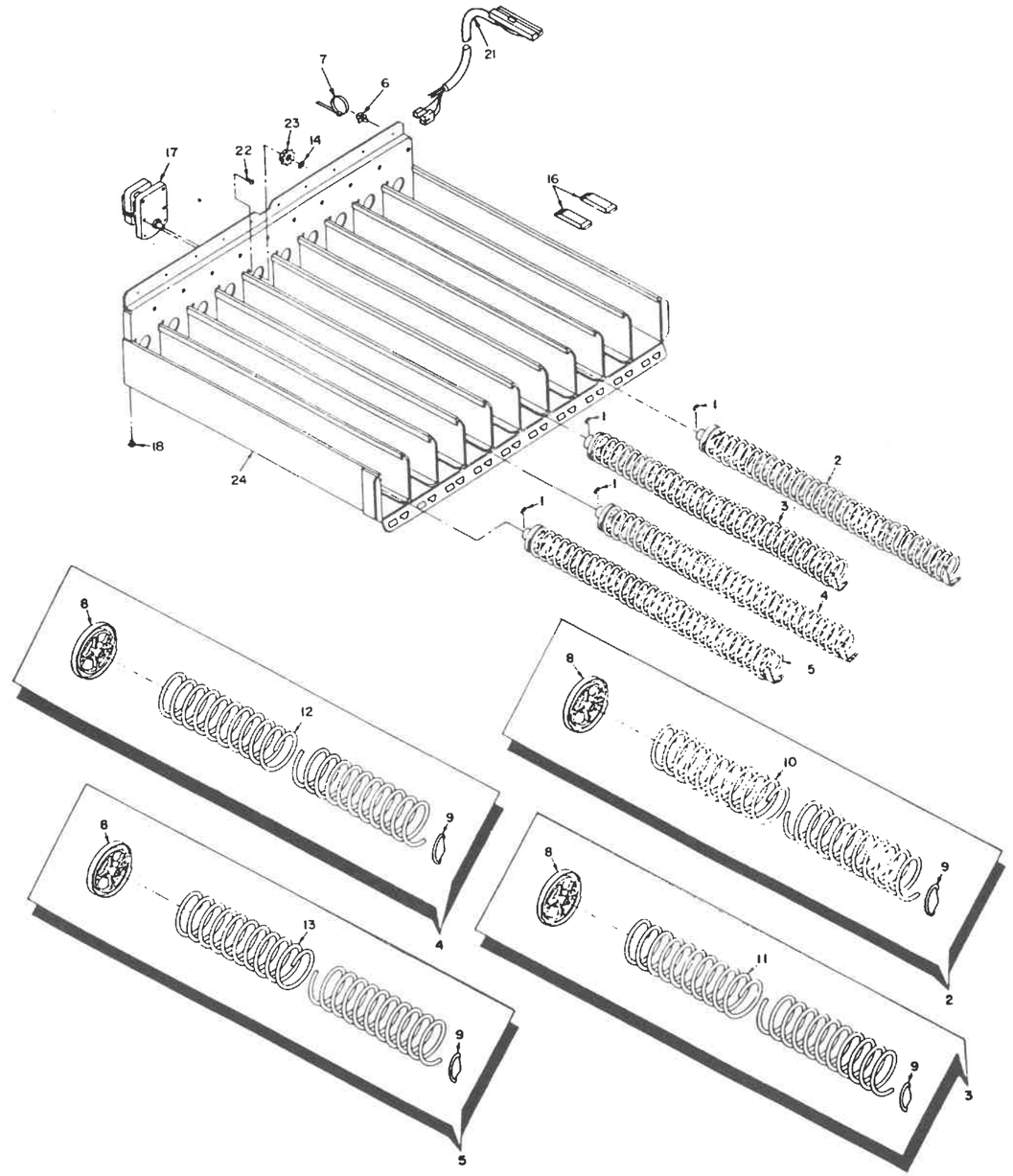

NARROW COLUMN TRAY ASSEMBLY

NARROW COLUMN TRAY ASSEMBLY

ITEM	DESCRIPTION	PART NO.	QTY.
1	RETAINING RING 5/16	R10K312	10
2	R. H. SPRING AUGER ASSEMBLY - 13/16" PITCH	210-5120 27	1
3	R. H. SPRING AUGER ASSEMBLY - 1" PITCH	210-5121 22	5
4	R. H. SPRING AUGER ASSEMBLY - 1 3/16" PITCH	210-5122 18	3
5	R. H. SPRING AUGER ASSEMBLY - 1 1/2" PITCH	210-5123 14	1
6	PUSH MOUNT	099-8062	1
7	TY RAP	001-8103	1
8	DRIVE GEAR - HELIX	210-3006	10
9	EJECTOR	210-3020	10
10	R.H. SPRING AUGER - 13/16" PITCH	210-7013	1
11	R.H. SPRING AUGER - 1" PITCH	210-7010	5
12	R.H. SPRING AUGER - 1 3/16" PITCH	210-7014	3
13	R. H. SPRING AUGER - 1 1/2" PITCH	210-7015	1
14	PUSHNUT	210-8017	10
15	WEAR PAD	210-3010	10
16	DRIVE MOTOR	099-8017	10
17	CANOE CLIP .100 ROUND HEAD	210-8021	3
20	TRAY WIRE HARNESS - 10 COLUMN	2146201	1
22	SCREW NO. 8-32 X 3/8	S41C832-6	20
23	DRIVE GEAR	210-3005	10
24	TRAY WELDMENT - 8 COLUMN	099-5057	0
	TRAY WELDMENT - 10 COLUMN	099-5058	1

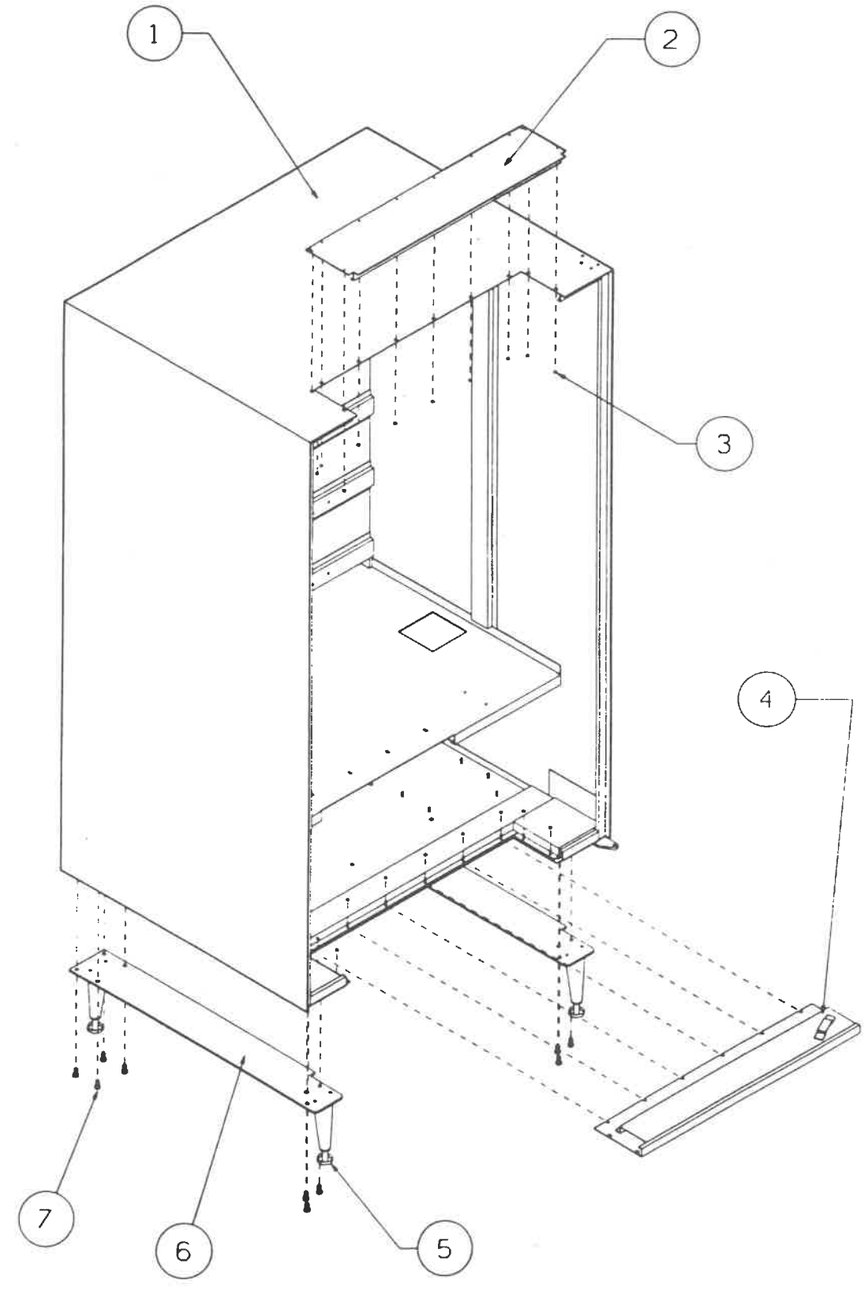

MAIN CABINET PANELS / LEGS

MAIN CABINET PANELS / LEGS
PARTS LIST

ITEM	DESCRIPTION	PART NO.	QTY.
1	CABINET WELDMENT, "C", SNACK	099-5539	1
2	CABINET TOP INSERT ASSEMBLY	099-4164BLK	1
3	NUT, HEX W/LOCKWASHER, #8-32	20208	20
4	INSERT ASSEMBLY - "C" BOTTOM	099-5156BLK	1
	INSERT ASSEMBLY - "B" BOTTOM	099-5157BLK	1
5	LEG LEVELER	19765	4
6	CABINET LEG ASSEMBLY	224-5054BLK	2
7	BOLT, HEX, 5/16-18 X 5/8	19302	14

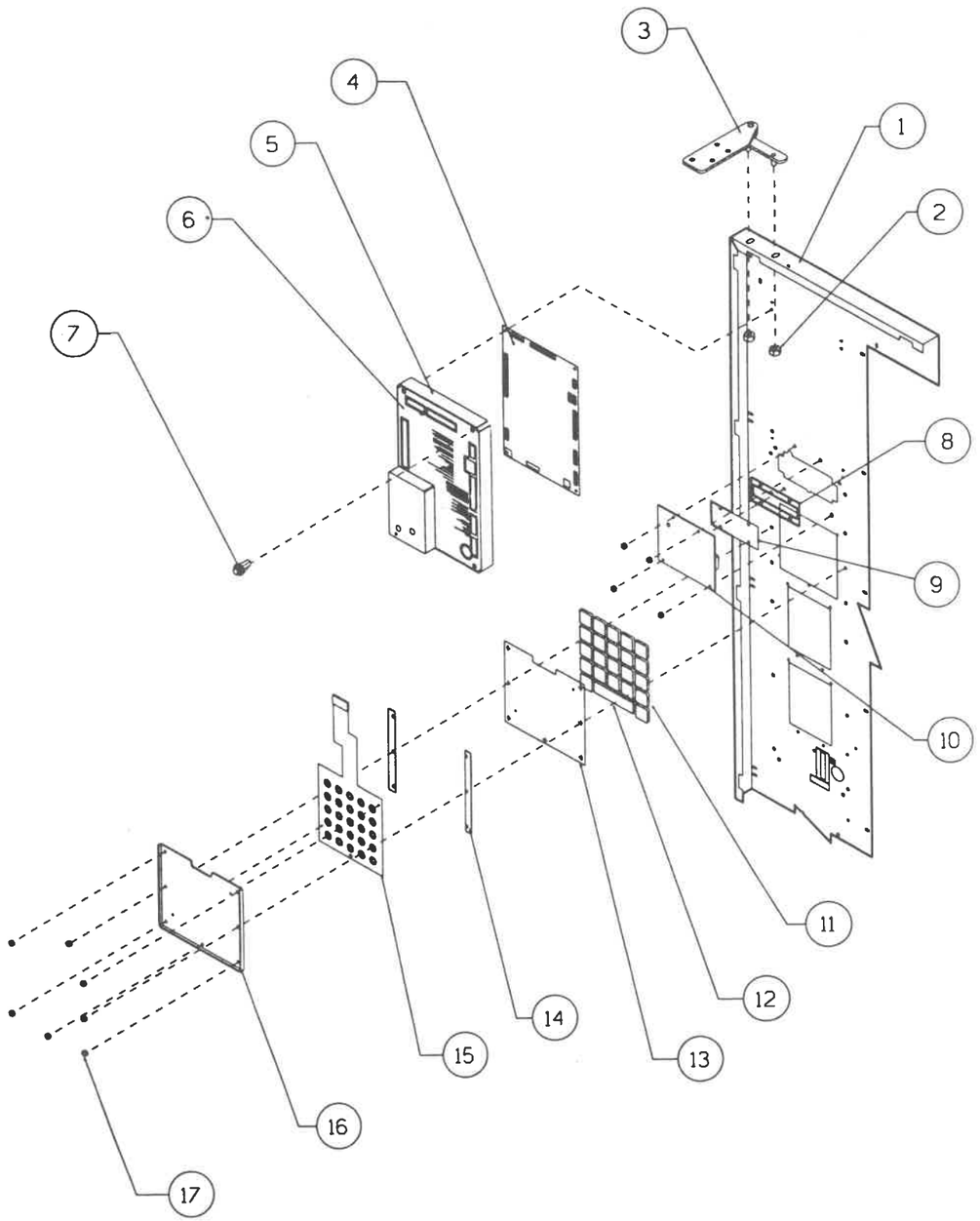

CONTROL BOARD / KEYPAD ASSEMBLY

CONTROL BOARD / KEYPAD ASSEMBLY
PARTS LIST

ITEM	DESCRIPTION	PART NO.	QTY.
1	DOOR WELD ASSEMBLY, "C" W/ INTERNATIONAL CONTROLLER	099-5534	1
2	NUT, #1/4-20, KEPS	N20C2520	2
3	HINGE ASSEMBLY, DOOR - TOP	150-5316	1
4	CONTROLLER, INTERNATIONAL	23357	1
5	COVER, ELECTRONIC	098-4353	1
6	DECAL, ELECTRONIC COVER	098-8166	1
7	PHONE JACK, LITTEL JAX	098-8135	1
8	LENS, EXTENDED CABINET	21061	1
9	FILTER, DISPLAY	21060	1
10	DISPLAY, 3/8, MULIT-NATIONAL	21153	1
11	BUTTON - "A" SELECT, WHITE/BLACK	22909A	1
	BUTTON - "B" SELECT, WHITE/BLACK	22909B	1
	BUTTON - "C" SELECT, WHITE/BLACK	22909C	1
	BUTTON - "D" SELECT, WHITE/BLACK	22909D	1
	BUTTON - "E" SELECT, WHITE/BLACK	22909E	1
	BUTTON - "F" SELECT, WHITE/BLACK	22909F	1
	BUTTON - "G" SELECT, WHITE/BLACK	22909G	1
	BUTTON - "H" SELECT, WHITE/BLACK	22909H	1
	BUTTON - "0" SELECT, WHITE/BLACK	229090	1
	BUTTON - "1" SELECT, WHITE/BLACK	229091	1
	BUTTON - "2" SELECT, WHITE/BLACK	229092	1
	BUTTON - "3" SELECT, WHITE/BLACK	229093	1
	BUTTON - "4" SELECT, WHITE/BLACK	229094	1
	BUTTON - "5" SELECT, WHITE/BLACK	229095	1
	BUTTON - "6" SELECT, WHITE/BLACK	229096	1
	BUTTON - "7" SELECT, WHITE/BLACK	229097	1
	BUTTON - "8" SELECT, WHITE/BLACK	229098	1
	BUTTON - "9" SELECT, WHITE/BLACK	229099	1
	BUTTON - "10" SELECT, WHITE/BLACK	2290910	1
	BUTTON - "11" SELECT, WHITE/BLACK	2290911	1
	BUTTON - "12" SELECT, WHITE/BLACK	2290912	1
	BUTTON - "13" SELECT, WHITE/BLACK	2290913	1
12	BUTTON - SELECTION	2346201	1
13	SPACER - "B"/"C"/"D" KEYPAD	098-8170	1
14	SHIM - "B"/"C"/"D" KEYPAD SPACER	098-4355U	2
15	KEYPAD 5 X 5	098-8167	1
16	PLATE - KEYPAD BACKING	098-4354	1
17	NUT, HEX W/LOCKWASHER, #8-32	20208	9

POWER BOX ASSEMBLY

PARTS LIST FOR POWER BOX ASSEMBLY DOMESTIC

ITEM	DESCRIPTION	PART NO.	QTY.
1	POWER BOX W.A.	099-5573	1
2	TRANSFORMER ASSEMBLY	099-5571	1
3	3 AMP CIRCUIT BREAKER	2233002	1
4	CAP HOUSING - 3 CIRCUIT	097-8038	1
5	RFI FILTER	20758	1
6	APPLIANCE OUTLET	19663	1
7	115V 13W BALLAST	099-5574	1
8	STARTER SOCKET ASSEMBLY	098-5204	1
9	GROUND HARNESS	099-5575	1
10	6 CIR. CAP HOUSING	210-0085	1
12	POWER FEED HARNESS	099-5576	1
13	CIR. BREAKER FEED HARNESS	099-5577	1
15	POWER BOX BACK	099-4212	1
16	POWER BOX COVER	099-4213	1
17	SCREW, #8-32 SEMS	01715	5
18	NUT, #8-32 SEMS	20208	1
19	SCREW, #8-18	01868	3
20	GROMMET, 3/8" HOLE	001-8020	1
21	HEX NUT, M3	N24CM3	2
22	SCREW, M3 X 14 MM	S16CM3-14	2
23	15 AMP CIRCUIT BREAKER	2233005	1

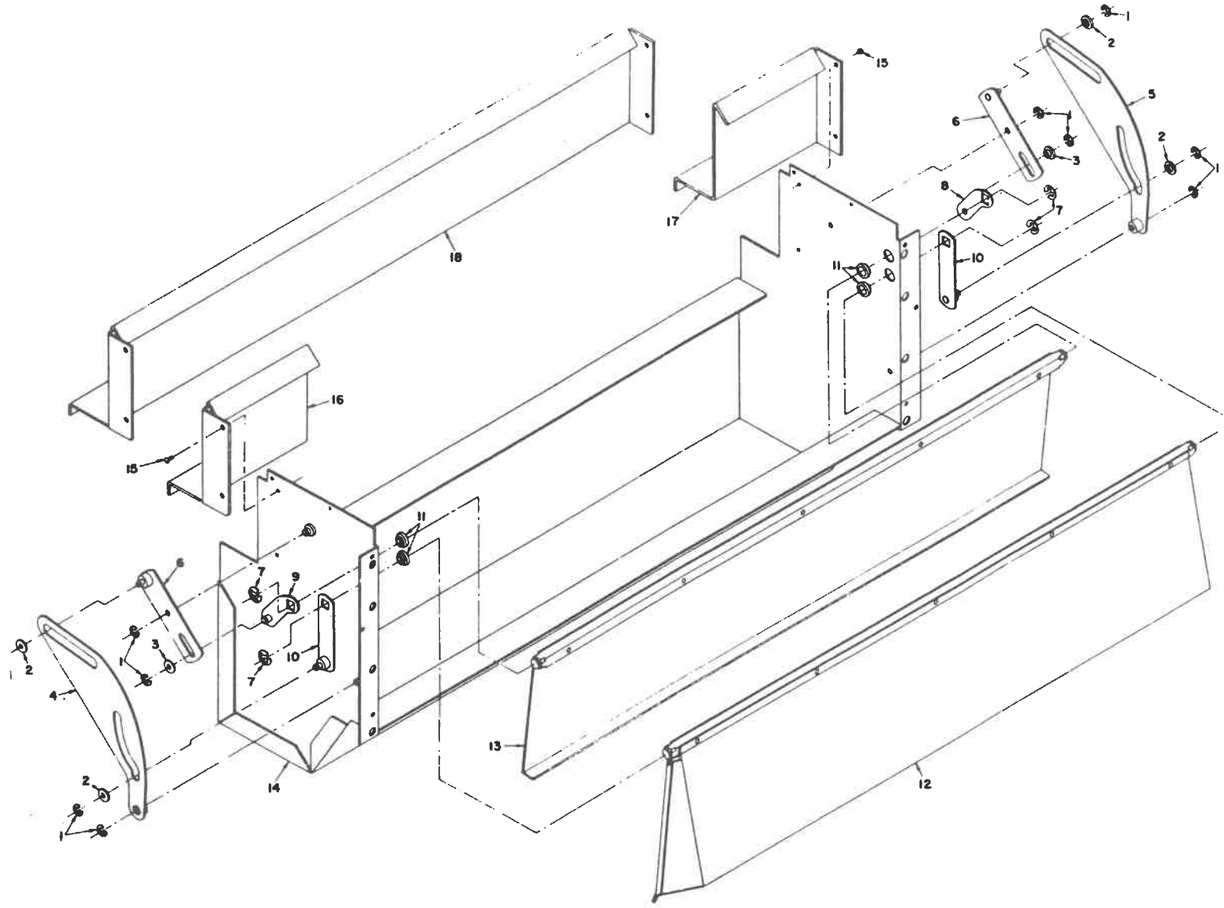

DELIVERY COMPARTMENT ASSEMBLY

DELIVERY COMPARTMENT ASSEMBLY

ITEM	DESCRIPTION	PART NO.	QTY.
1	RETAINING RING	R10K250	10
2	DRIVE AND LIFT ARM ROLLER	220-6020	4
3	LIFT ARM ROLLER	220-6021	2
4	LEFT HAND IDLER ARM ASSEMBLY	220-5121	1
5	RIGHT HAND IDLER ARM ASSEMBLY	220-5120	1
6	ANIT-CHEAT LIFT ARM ASSEMBLY	220-5119	2
7	RETAINING RING 3/8	R10K375	4
8	RIGHT HAND DRIVE ARM ASSEMBLY ANTI-CHEAT	220-5116	1
9	LEFT HAND DRIVE ARM ASSEMBLY ANTI-CHEAT	220-5117	1
10	DRIVE ARM ASSEMBLY - DELIVERY DOOR	220-5118	2
11	BUSHING DELIVERY AND ANTI-CHEAT DOOR	220-6022	4
12	DELIVERY DOOR ASSEMBLY C	220-5114	1
13	ANIT-CHEAT DOOR ASSEMBLY C	099-5111	1
14	DELIVERY TRAY WELDMENT ASSEMBLY C	099-5132	1
15	SCREW NO. 8-32 X 1/4	S42C832-4	4
16	LEFT HAND BACK DELIVERY TRAY	099-4093	1
17	RIGHT HAND BACK DELIVERY TRAY	099-4092	1
18	NO. MINT COVER ASSEMBLY C	099-5149	1

FRONT DOOR TRIM SCREWS

PART NO.	USAGE	QTY.
13140	DELIVERY TRAY TRIM AND HORIZONTAL TRIM AS SHOWN.	20
S39C818-12	AROUND DISPLAY GLASS.	20
S40C620-8	SERVICE DOOR SIDE TRIM AND SERVICE DOOR END TRIM.	40

NOTE:

THIS DETAIL APPLIES TO LEKTROVEND AND POLYVEND "B" / "C" MODEL SNACK MACHINE TRIM INSTALLATION ONLY.
SEE TRIM AND PANEL ASSEMBLIES FOR STYLE, SERIES AND MODEL.

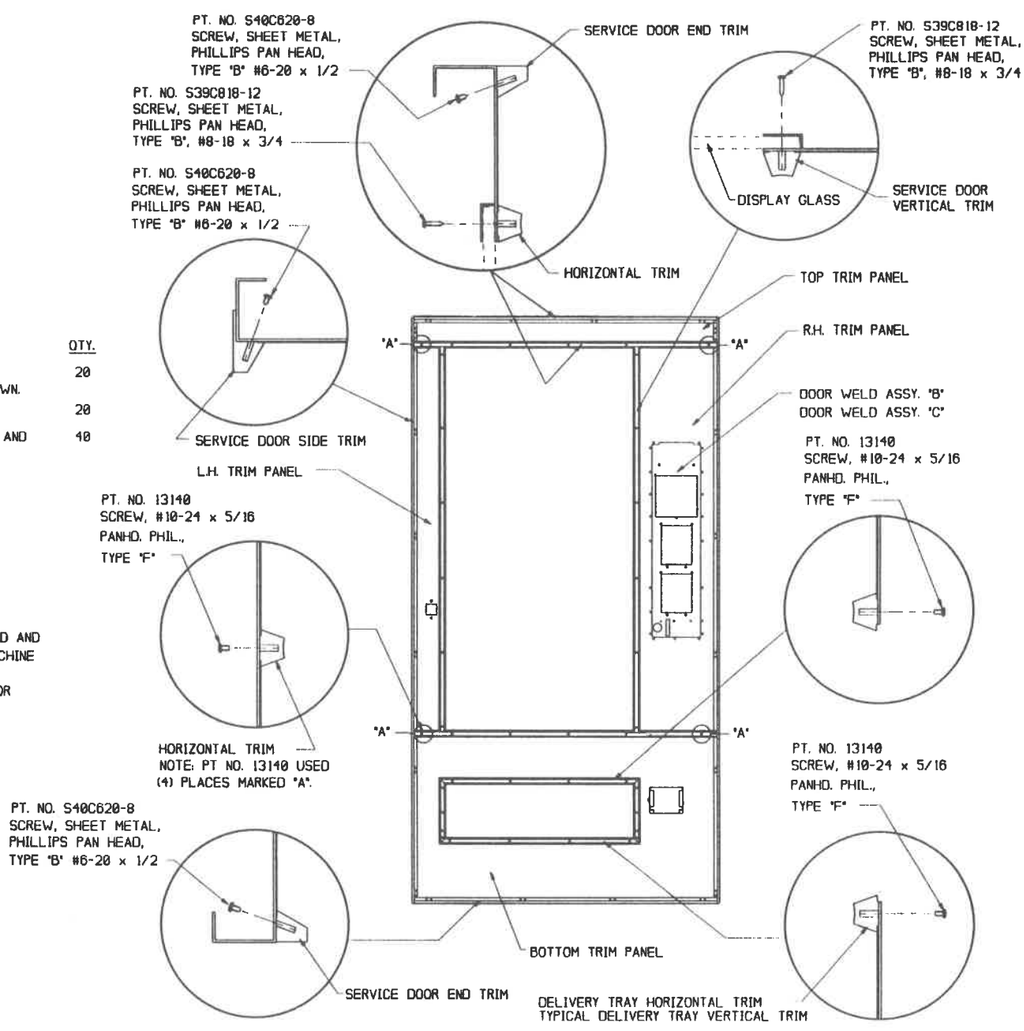

Polyvend® INC.

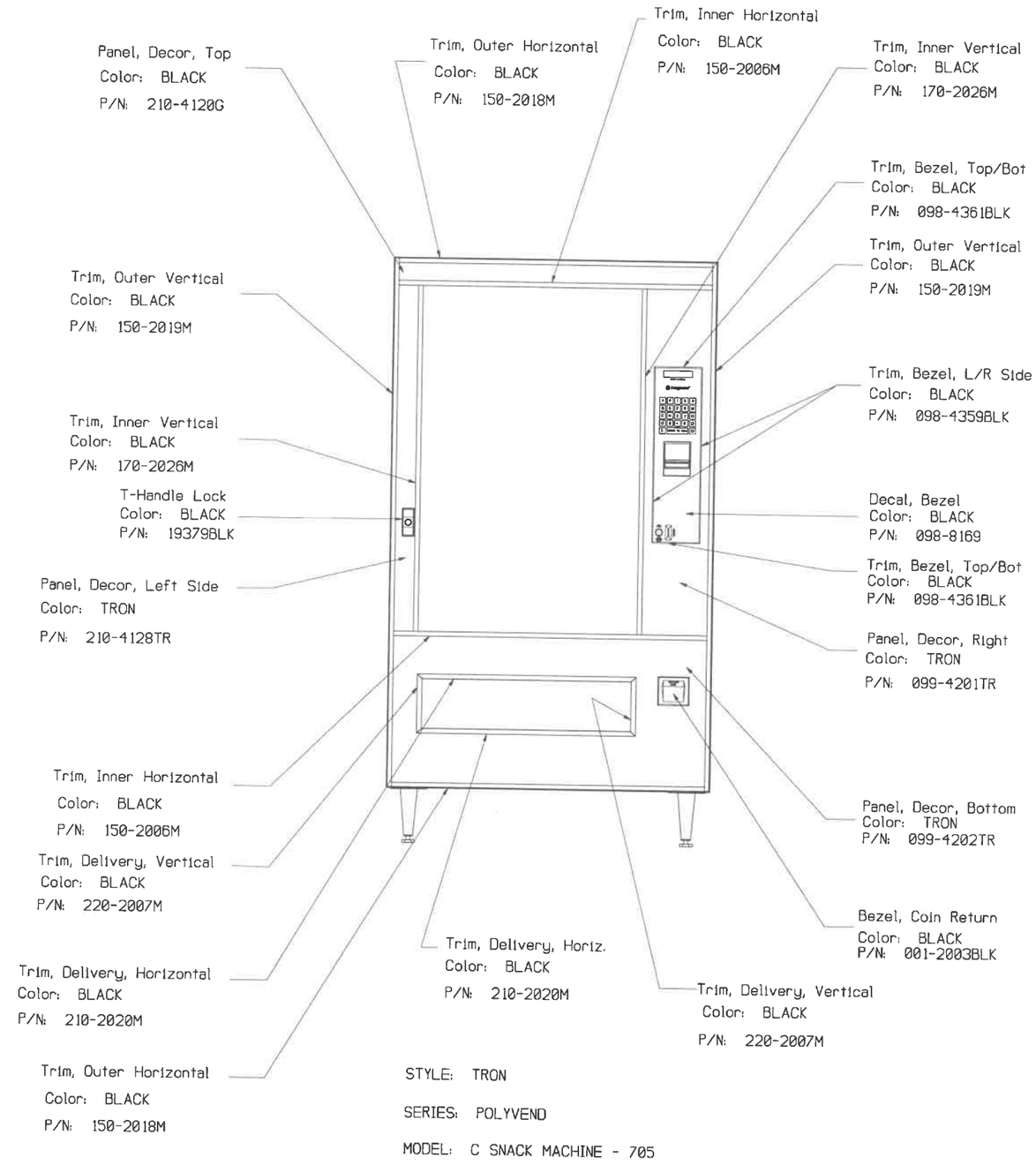
Panel, Decor, Top
Color: BLACK
P/N: 210-4120G
Trim, Outer Horizontal
Color: BLACK
P/N: 150-2018M
Trim, Inner Horizontal
Color: BLACK
P/N: 150-2006M
Trim, Inner Vertical
Color: BLACK
P/N: 170-2026M
Trim, Bezel, Top/Bot
Color: BLACK
P/N: 098-4361BLK
Trim, Outer Vertical
Color: BLACK
P/N: 150-2019M
Trim, Outer Vertical
Color: BLACK
P/N: 150-2019M
Trim, Bezel, L/R Side
Color: BLACK
P/N: 098-4359BLK
Trim, Inner Vertical
Color: BLACK
P/N: 170-2026M
T-Handle Lock
Color: BLACK
P/N: 19379BLK
Decal, Bezel
Color: BLACK
P/N: 098-8169
Panel, Decor, Left Side
Color: TRON
P/N: 210-4128TR
Trim, Bezel, Top/Bot
Color: BLACK
P/N: 098-4361BLK
Panel, Decor, Right
Color: TRON
P/N: 099-4201TR
Trim, Inner Horizontal
Color: BLACK
P/N: 150-2006M
Panel, Decor, Bottom
Color: TRON
P/N: 099-4202TR
Trim, Delivery, Vertical
Color: BLACK
P/N: 220-2007M
Bezel, Coin Return
Color: BLACK
P/N: 001-2003BLK
Trim, Delivery, Horizontal
Color: BLACK
P/N: 210-2020M
Trim, Delivery, Horiz.
Color: BLACK
P/N: 210-2020M
Trim, Delivery, Vertical
Color: BLACK
P/N: 220-2007M
Trim, Outer Horizontal
Color: BLACK
P/N: 150-2018M
STYLE: TRON
SERIES: POLYVEND
MODEL: C SNACK MACHINE - 705

Polyvend® INC.

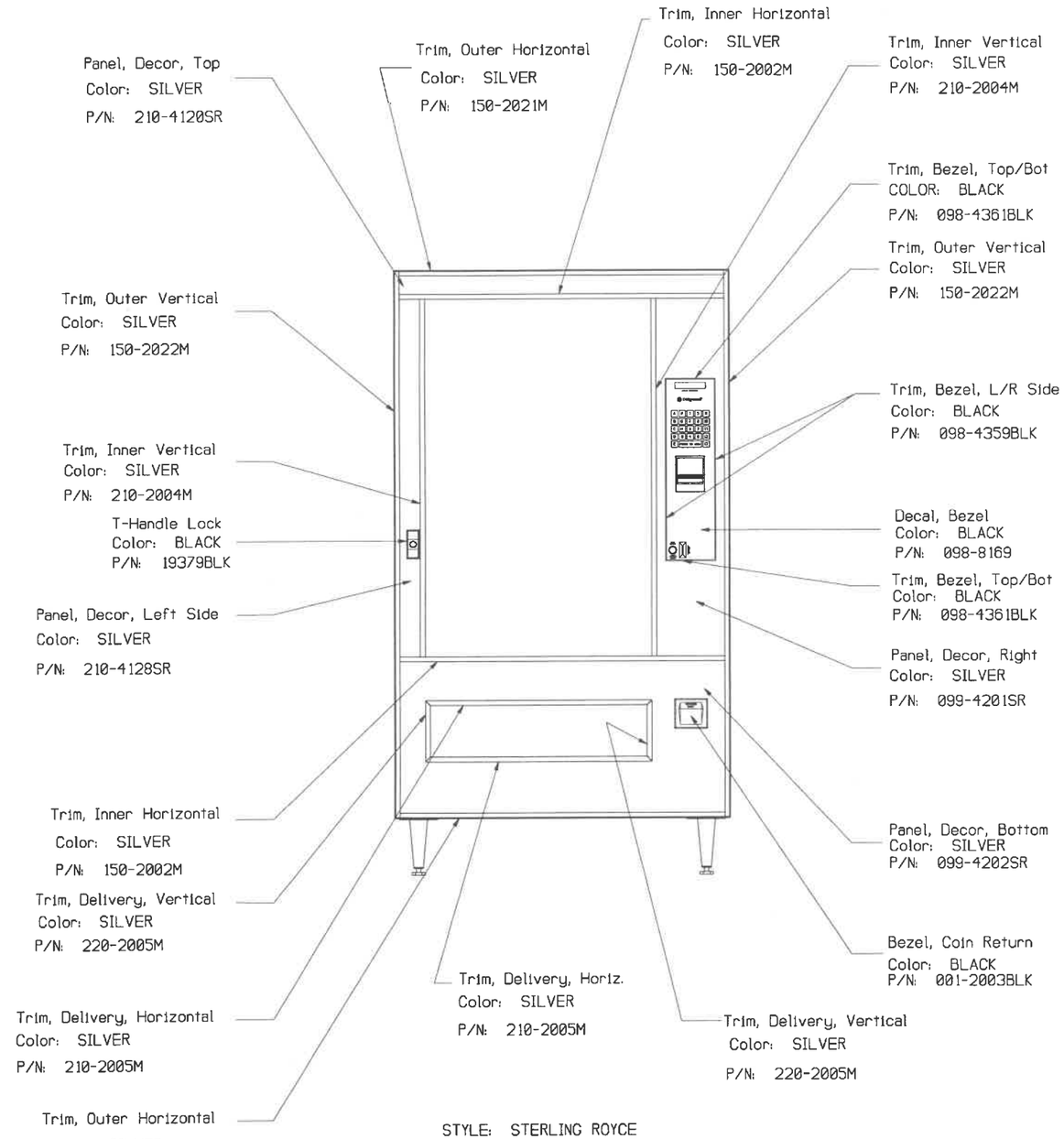

STYLE: STERLING ROYCE

SERIES: POLYVEND

MODEL: C SNACK MACHINE - 705

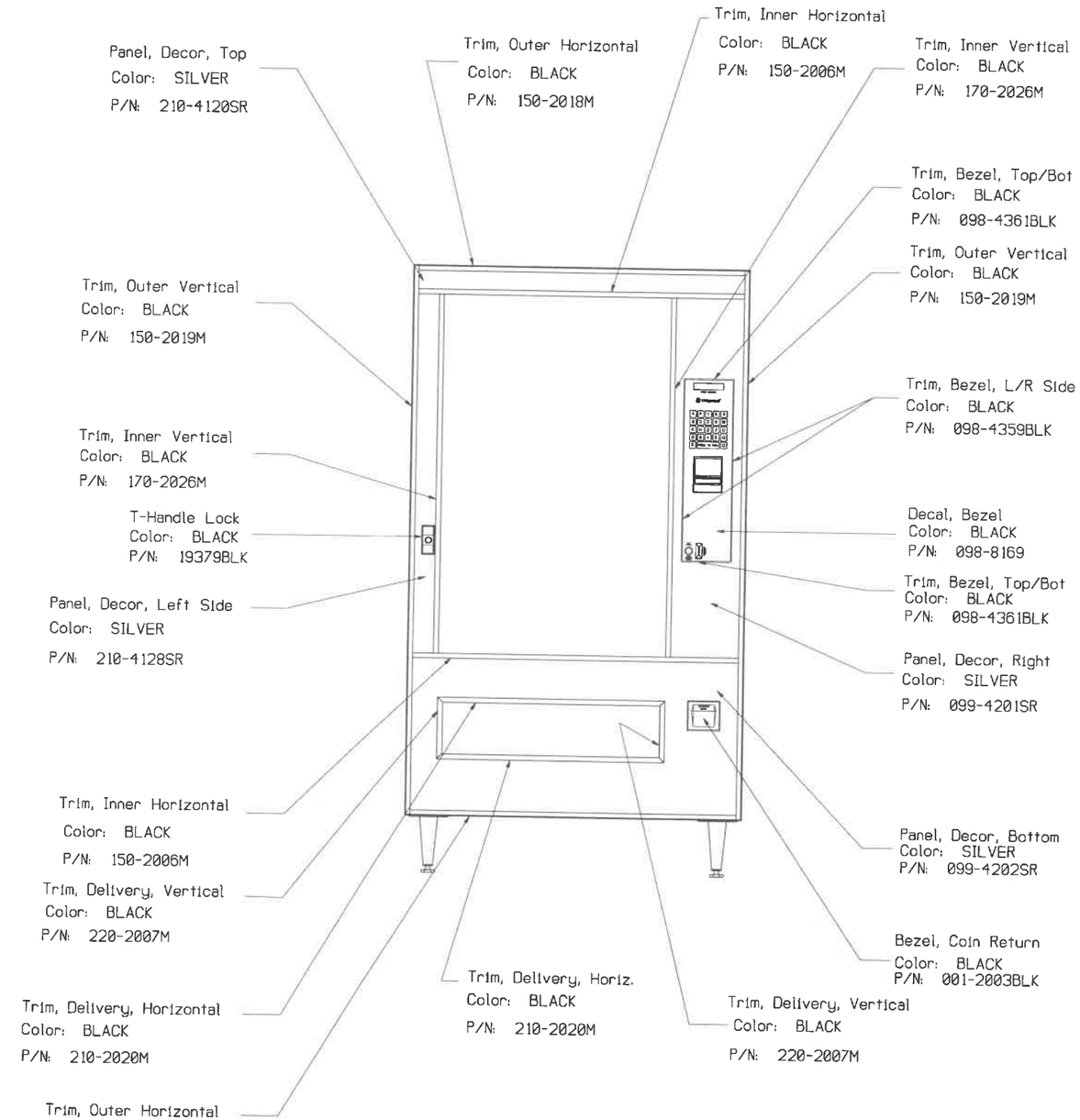

STYLE: SIGNATURE

SERIES: POLYVEND

MODEL: C SNACK MACHINE - 705

Polyvend® INC.

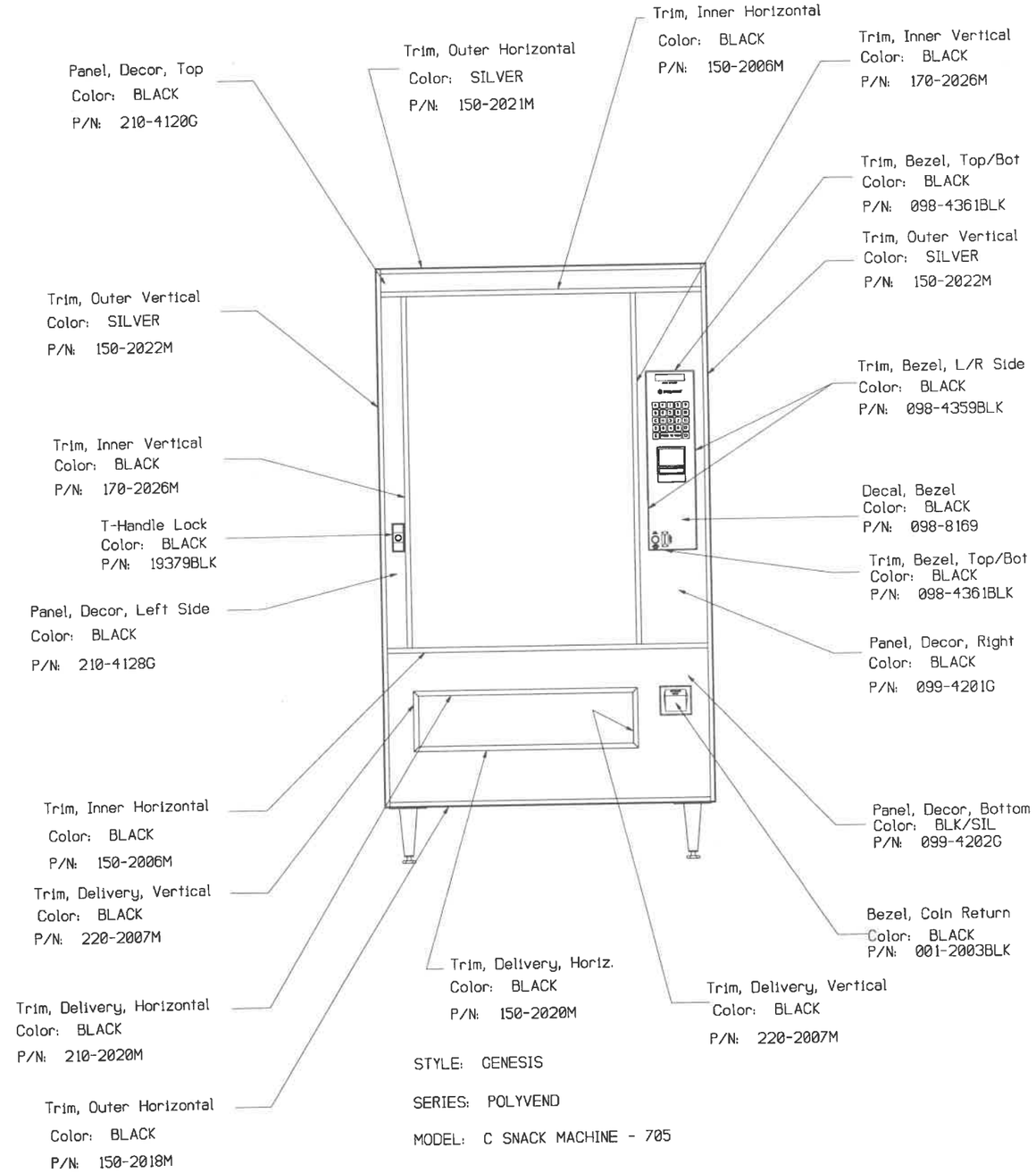

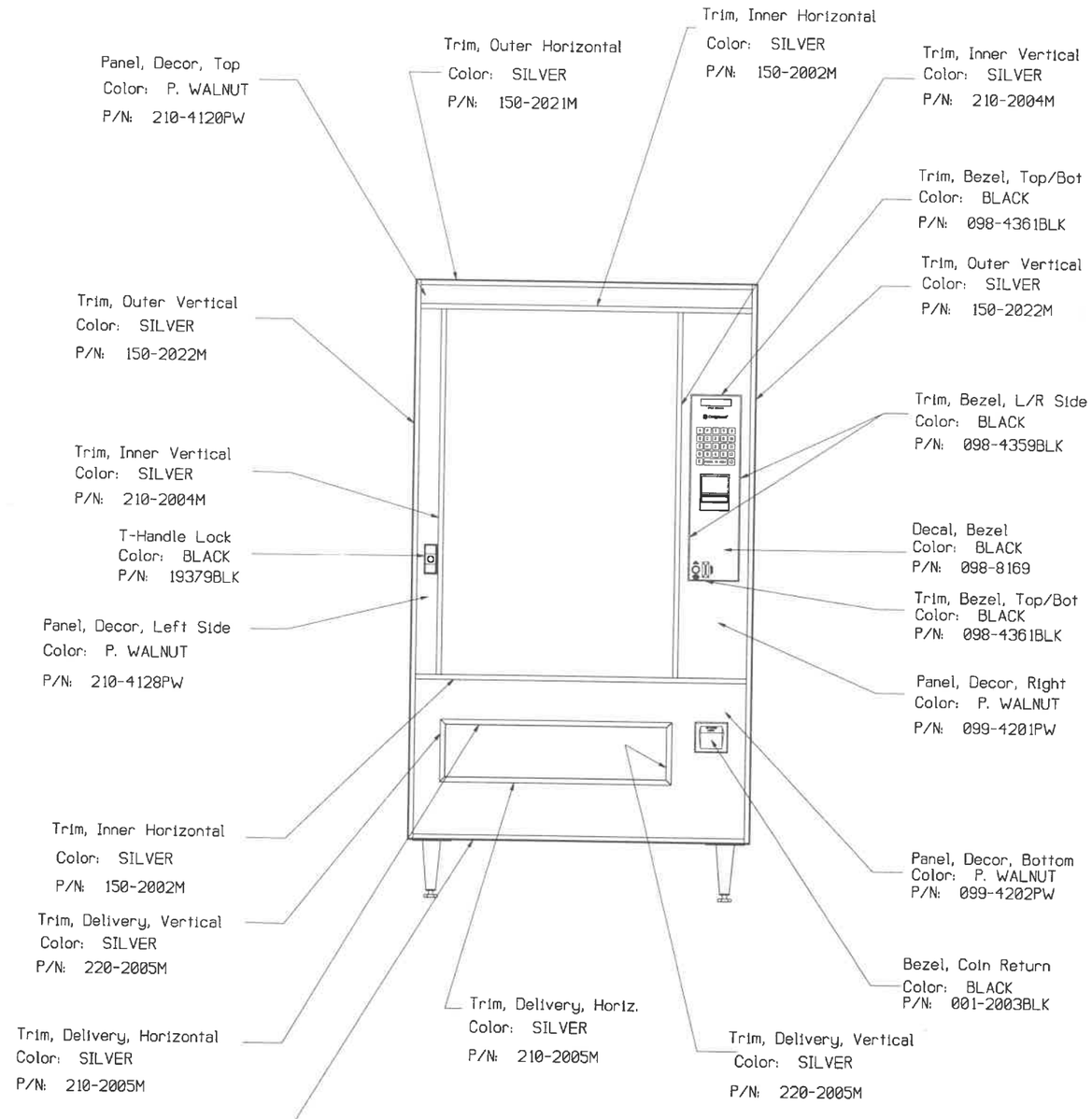

STYLE: PRESIDENTIAL WALNUT

SERIES: POLYVEND

MODEL: C SNACK MACHINE - 705

Polyvend® INC.

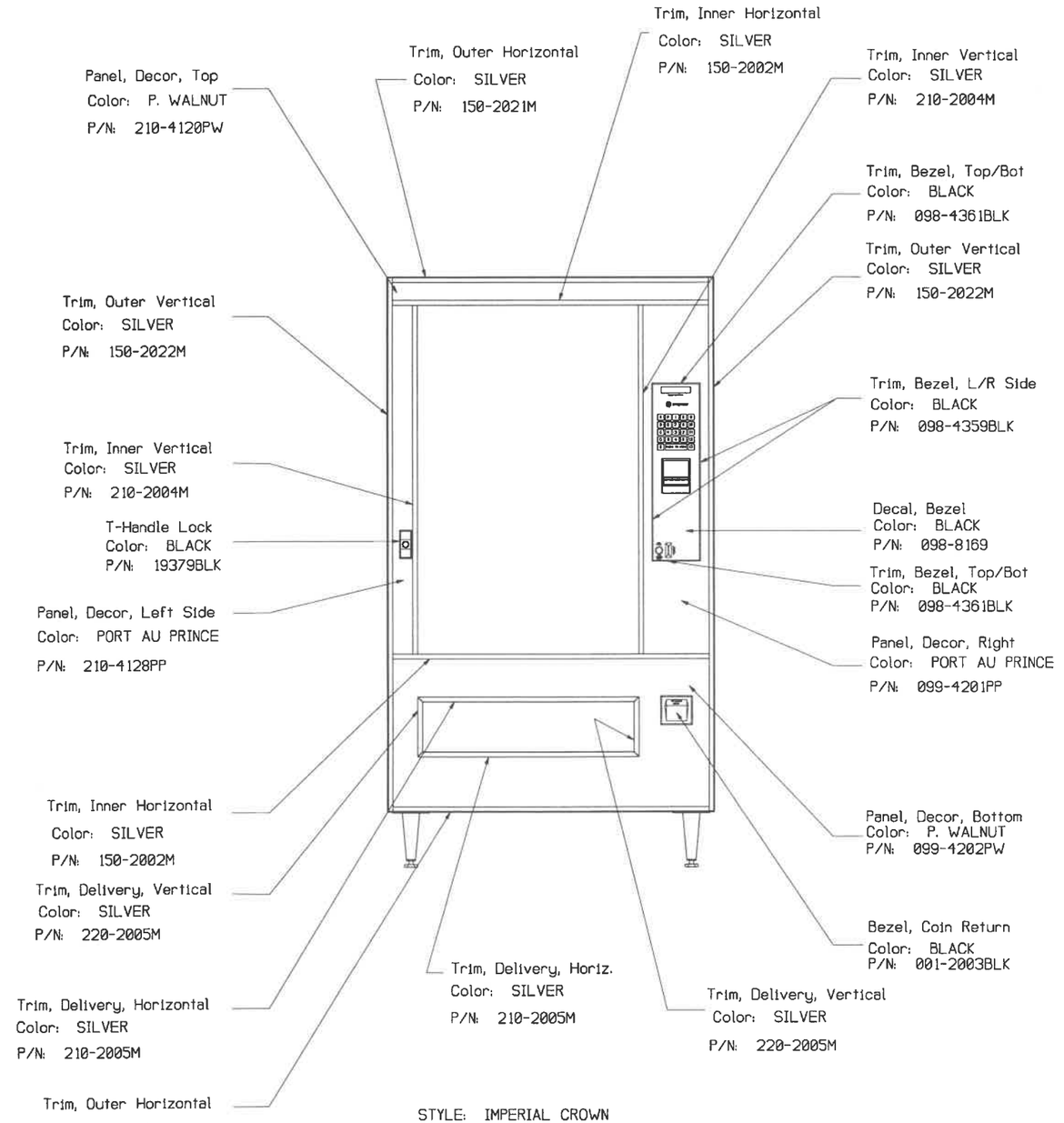

STYLE: IMPERIAL CROWN

SERIES: POLYVEND

MODEL: C SNACK MACHINE - 705

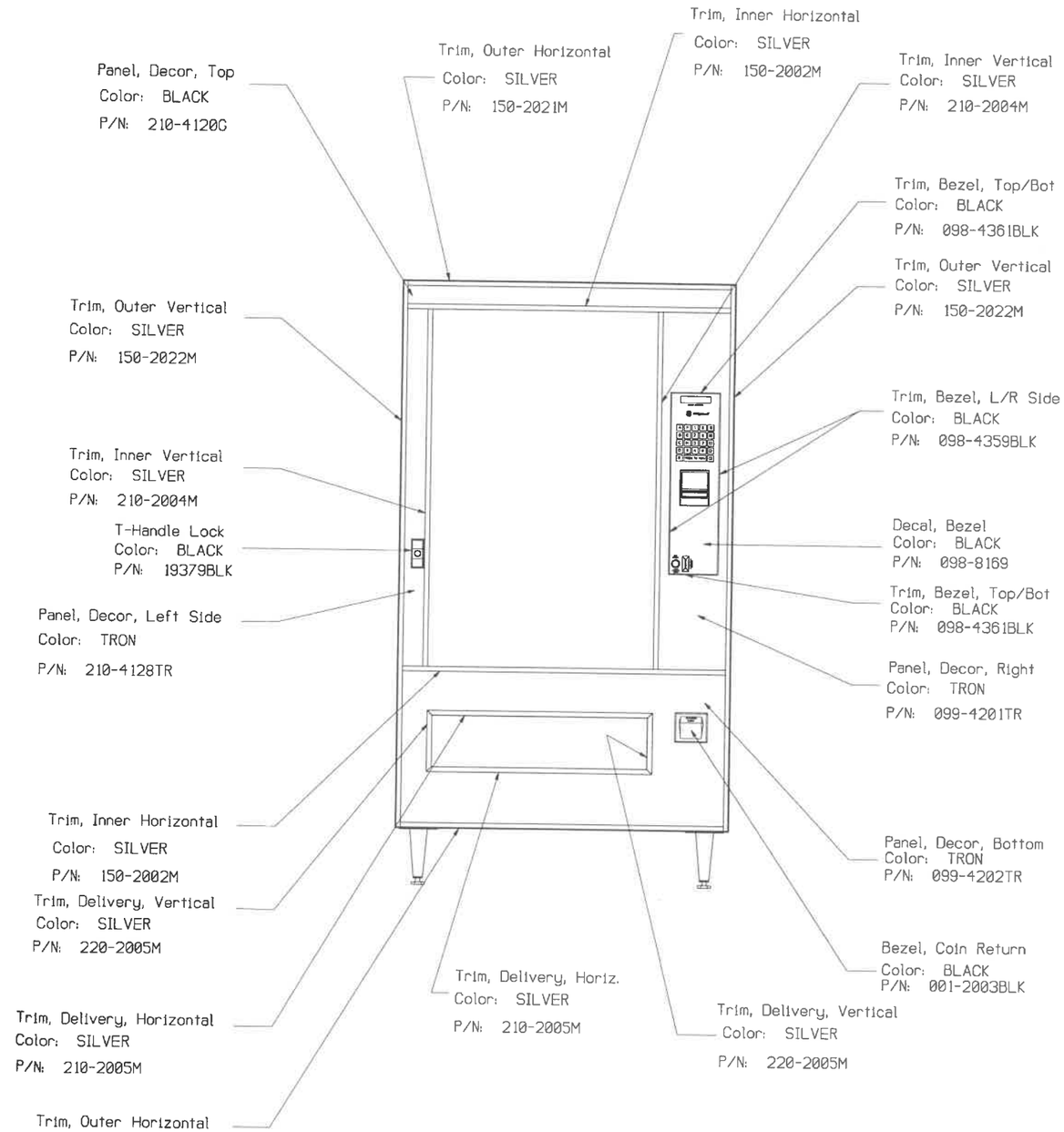

STYLE: SILVER TRON

SERIES: POLYVEND

MODEL: C SNACK MACHINE - 705

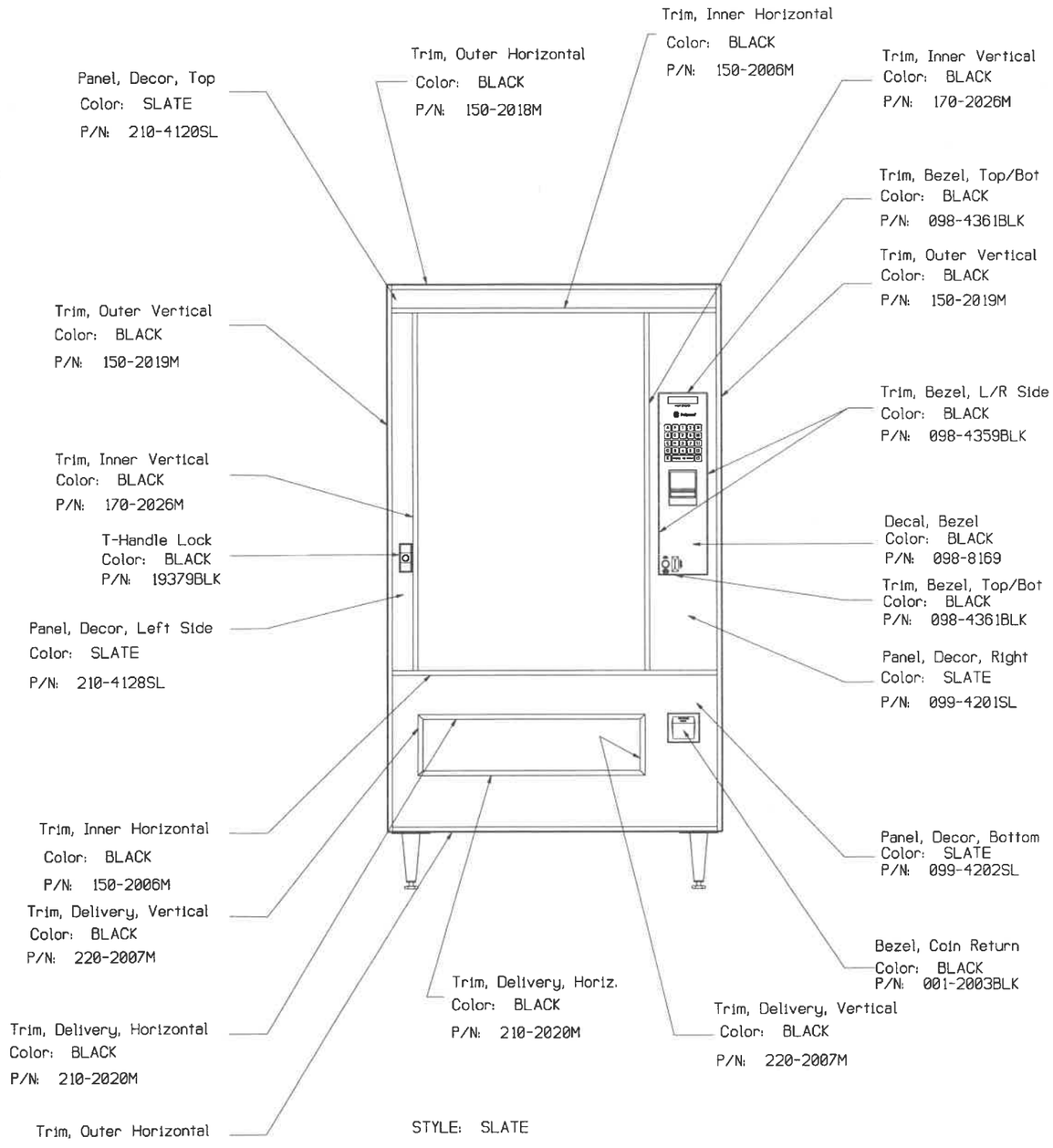

STYLE: SLATE

SERIES: POLYVEND

MODEL: C SNACK MACHINE - 705

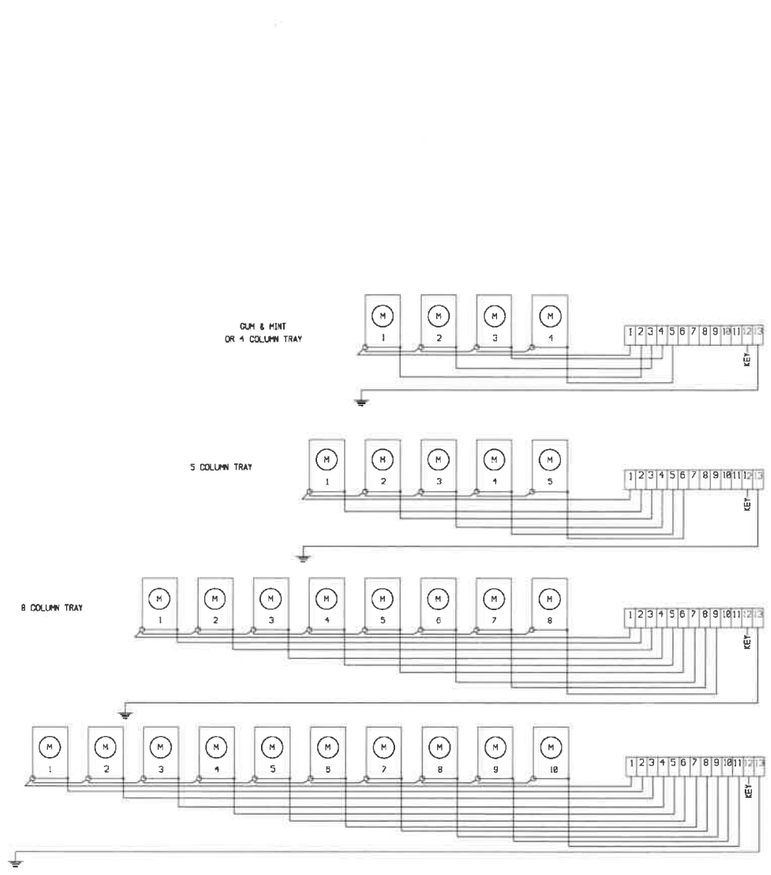

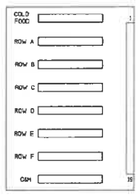

2142402

098-5294

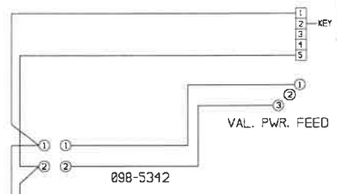

098-5342

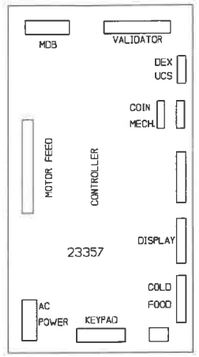

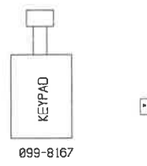

099-8167

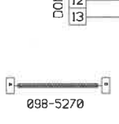

098-5270
21153

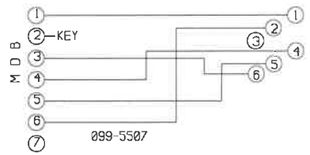

099-5507

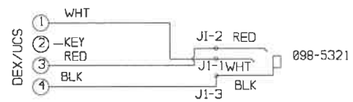

098-5321

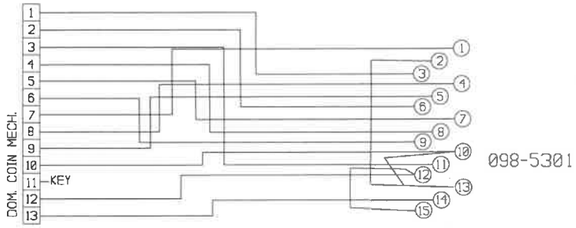

098-5301

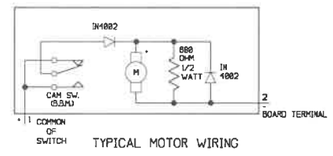

TYPICAL MOTOR WIRING

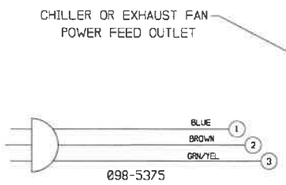

098-5375

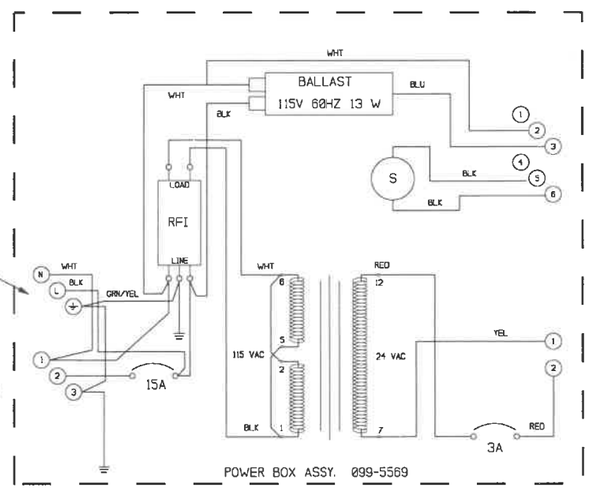

POWER BOX ASSY. 099-5569

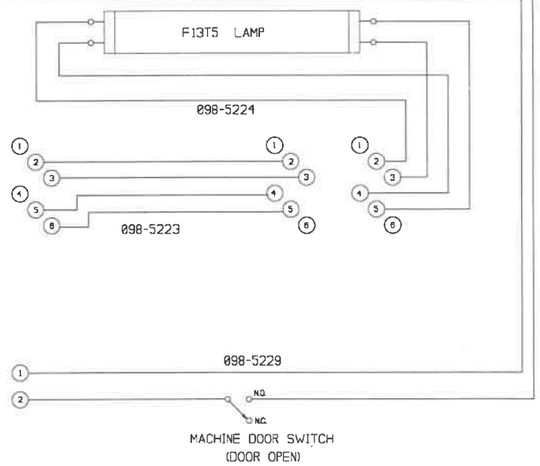

WIRING DIAGRAM.COMPLETE MACHINE

WARNING:
UNPLUG MACHINE BEFORE DISCONNECTING OR CONNECTING ANY ELECTRICAL PLUG. THIS WILL PREVENT POSSIBLE DAMAGE TO ELECTRONICS.

WIRING ASSEMBLY PART NUMBERS